NOTE: 1
DESIGN CODE:
API 6A

NOTE: 2
TECHNICAL CLASSIFICATION:

Article Type:	010-Quick Con. System
Main Group:	10.01. Single Line Quick Connector
Intermediate Group:	10.1001.03. High Pressure
Sub Group:	10.1001.205.01. Male

NOTE: 3
INTERFACE INFORMATION:

Pressure Rating Bar:	2000
Material:	N/A
Weight:	14 kg
Volume:	1,84 dm^3
Surface Area:	4609 cm^2
Hydraulic:	1" HP
Mechanical:	N/A
Electrical:	N/A
Com. & Protocol:	N/A

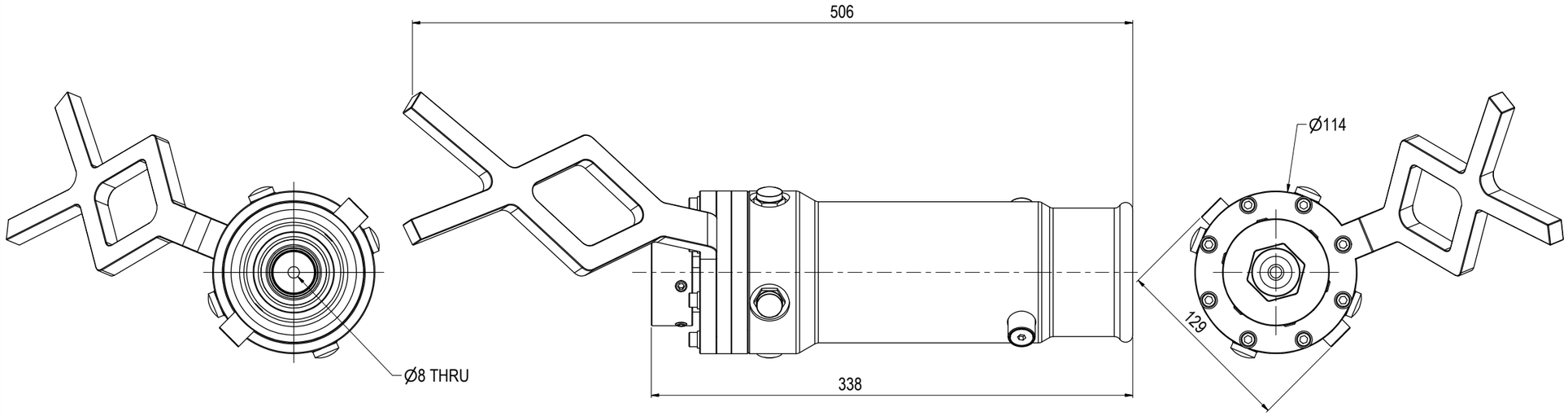

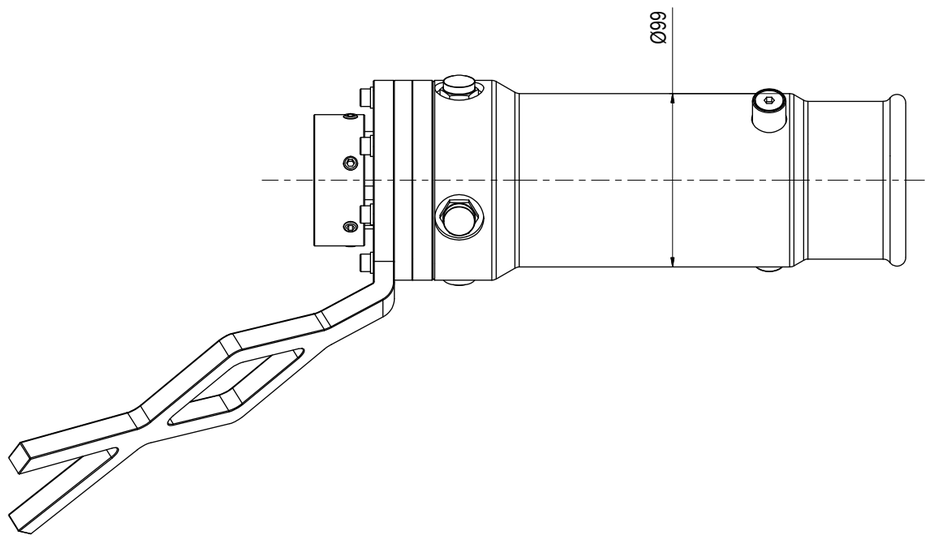

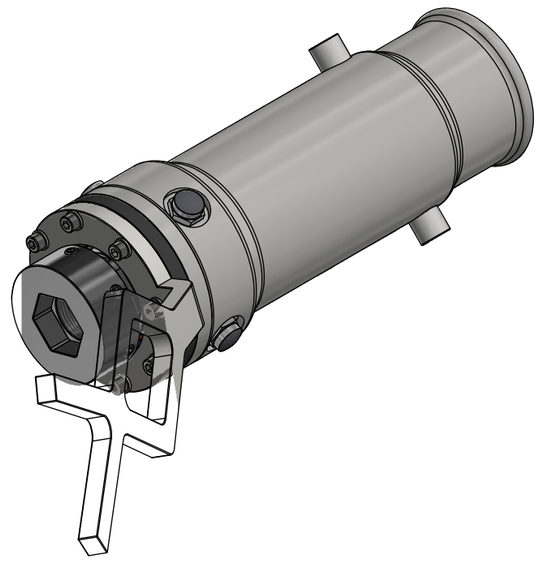

Rev.	Date	Reason for issue	Revision change	Made	Chk'd	Appr.
02	12.7.2019	9-IFU (Issued for Use)		HNJ	LGH	HNJ
01	11.6.2019	2-IFT (Issued for Tender)		WTJ	HNJ	WTJ

BLUE LOGIC

Dwg Scale: NTS
Dwg Proj:
Dwg Format: A3

Drawing title: 1" 30k QC Stab 1" HP Interface

Drawing number: BB3577

Rev. 02