Parts List - Intervention Types				
ITEM	QTY	PART No.	DESCRIPTION	WEBLINK
1	1	BA3763	Ø55 SP Stab 5K Interv WL NPT 1 1/2"	http://e-sea.bluelogic.no/main.aspx?page=article&artno=BA3763
2	1	BA3236	Ø55 SP Stab 15K Interv WL MP 1"	http://e-sea.bluelogic.no/main.aspx?page=article&artno=BA3236
3	1	BA3235	Ø55 SP Rec 15K Interv WL MP 1"	http://e-sea.bluelogic.no/main.aspx?page=article&artno=BA3235
4	1	BA2805	Ø55 SP Stab 15K Interv MP 1"	http://e-sea.bluelogic.no/main.aspx?page=article&artno=BA2805
5	1	BA1564	Ø55 SP Stab 1000Bar Interv MP 3/4" Bleed Off	http://e-sea.bluelogic.no/main.aspx?page=article&artno=BA1564
6	1	BA1512	Ø55 SP Press Stab 15K Interv	http://e-sea.bluelogic.no/main.aspx?page=article&artno=BA1512

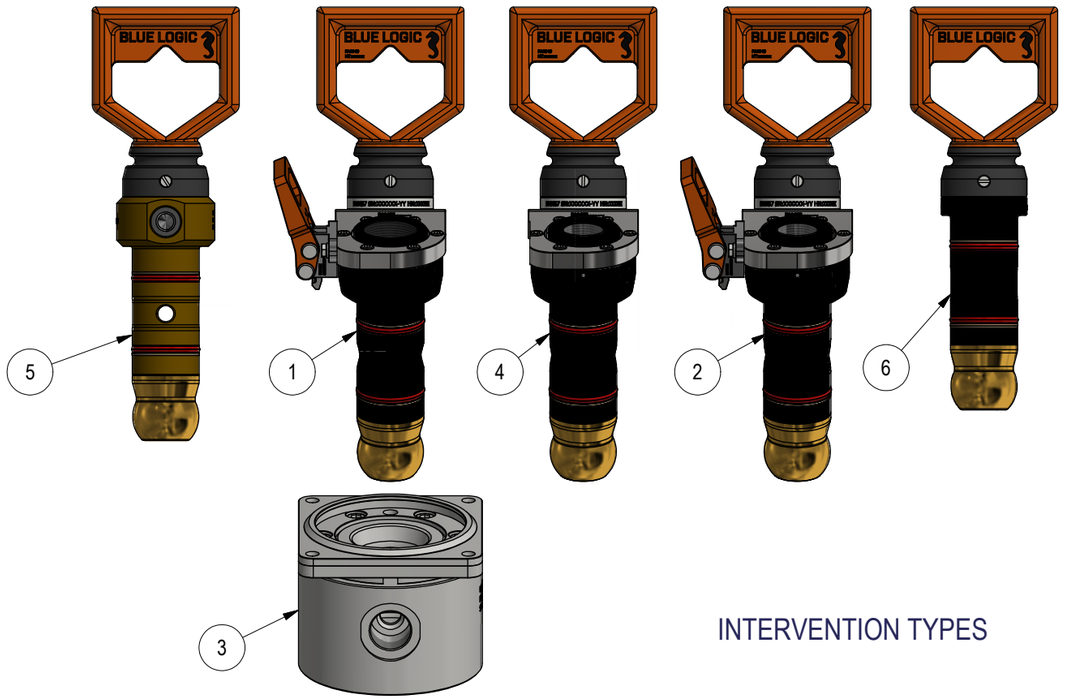

INTERVENTION TYPES

NOTE: 1
DESIGN CODE:
API 17H Type 1 Ø55 SP

NOTE: 2
ADDITIONAL INFORMATION:
Standard Hydraulic Interfaces

Parts List - Permanent Types				
ITEM	QTY	PART No.	DESCRIPTION	WEBLINK
1	1	BA5666	Ø55 SP Rec 5k Perm WN 2" Sch 80	http://e-sea.bluelogic.no/main.aspx?page=article&artno=BA5666
2	1	BA1560	Ø55 SP Prot Stab Vented Perm	http://e-sea.bluelogic.no/main.aspx?page=article&artno=BA1560
3	1	BA1520	Ø55 SP Park Rec Vented Perm	http://e-sea.bluelogic.no/main.aspx?page=article&artno=BA1520
4	1	BA1495	Ø55 SP Rec 15K Perm MP 1"	http://e-sea.bluelogic.no/main.aspx?page=article&artno=BA1495

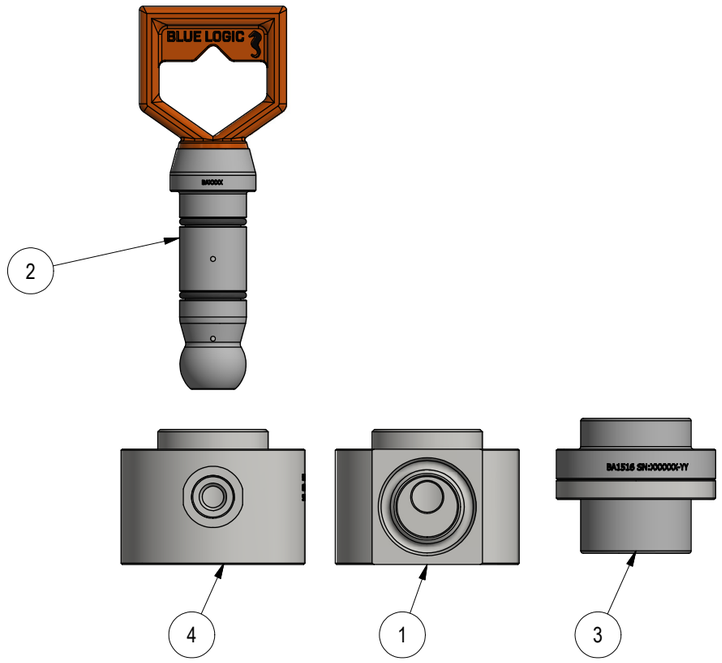

PERMANENT TYPES

FOR INFORMATION ONLY

Rev.	Date	Reason for issue	Revision change	Made	Chk'd	Appr.
01	2.7.2018	3-IFI (Issued for Information)		WTJ		

BLUE LOGIC

Dwg Scale: NTS
Dwg Proj:
Dwg Format: A3

Drawing title: Ø55 SP Stab & Rec Overview

Drawing number: BB2095

Rev. 01