Parts List - Intervention Types				
ITEM	QTY	PART No.	DESCRIPTION	WEBLINK
1	1	PA0429	Ø35 DP Rec 20K Interv BSP 3/8"	http://e-sea.bluelogic.no/main.aspx?page=article&artno=PA0429
2	1	PA0270	Ø35 DP Stab 10k Interv wCV BSP 3/8" ID6mm	http://e-sea.bluelogic.no/main.aspx?page=article&artno=PA0270
3	1	PA0214	Ø35 DP Rec 20k Interv wCV WL MP 1/4"	http://e-sea.bluelogic.no/main.aspx?page=article&artno=PA0214
4	1	PA0198	Ø35 DP Stab 20k Interv wCV WL BSP 1/4" 120° Cone	http://e-sea.bluelogic.no/main.aspx?page=article&artno=PA0198
5	1	PA0174	Ø35 DP Rec 10k Interv BSP 1/2" ID8mm	http://e-sea.bluelogic.no/main.aspx?page=article&artno=PA0174
6	1	BA9227	Ø35 DP Rec 10k Parking	http://e-sea.bluelogic.no/main.aspx?page=article&artno=BA9227
7	1	BA3257	Ø35 DP Rec 10k Interv wCV WL BSP 1/2"	http://e-sea.bluelogic.no/main.aspx?page=article&artno=BA3257
8	1	BA3255	Ø35 DP Stab 10k Interv wCV WL BSP 3/8"	http://e-sea.bluelogic.no/main.aspx?page=article&artno=BA3255
9	1	BA2236	Ø35 DP Prot Stab Interv with Relief Valve	http://e-sea.bluelogic.no/main.aspx?page=article&artno=BA2236
10	1	BA2012	Ø35 DP Rec 20k Interv wCV MP 1/4"	http://e-sea.bluelogic.no/main.aspx?page=article&artno=BA2012
11	1	BA2011	Ø35 DP Stab 20k Interv wCV BSP 1/4" 120° Cone	http://e-sea.bluelogic.no/main.aspx?page=article&artno=BA2011
12	1	BA1076	Ø35 DP Press Stab 10k Interv	http://e-sea.bluelogic.no/main.aspx?page=article&artno=BA1076
13	1	BA1043	Ø35 DP Rec 10K Interv wCV BSP 1/2" ID8mm	http://e-sea.bluelogic.no/main.aspx?page=article&artno=BA1043

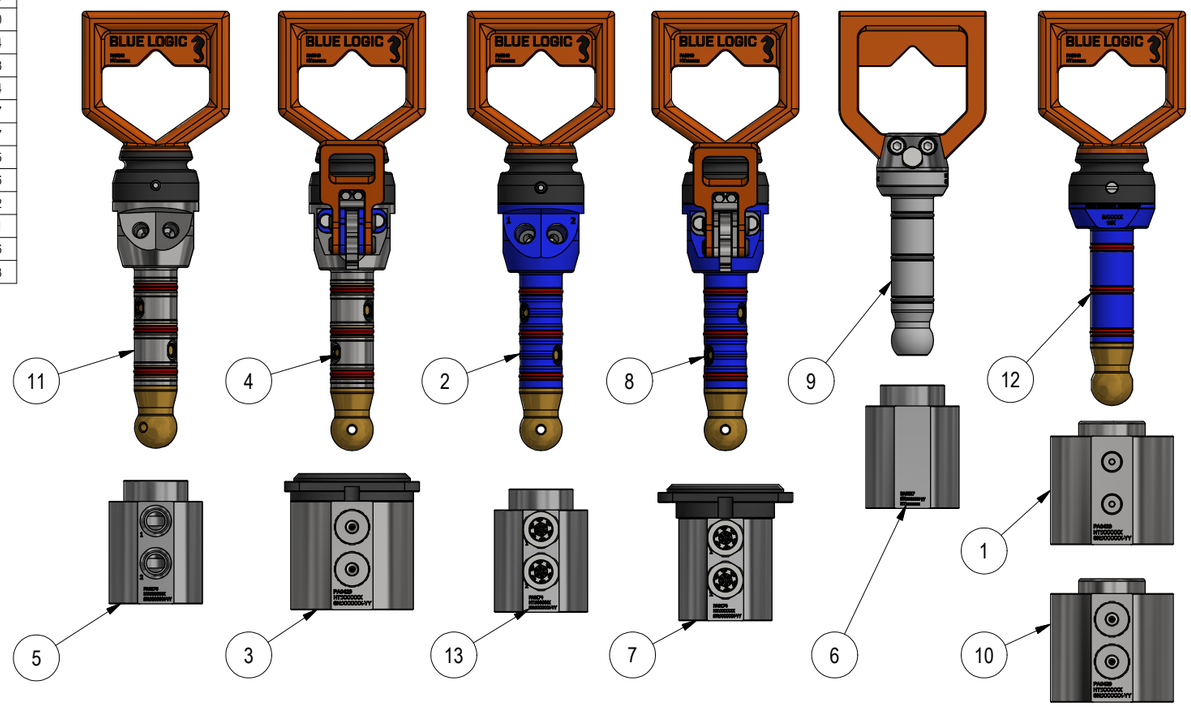

NOTE: 1
DESIGN CODE:
API 17H Type 1 Ø35 DP

NOTE: 2
ADDITIONAL INFORMATION:
Standard Hydraulic Interfaces

INTERVENTION TYPES

Parts List - Permanent Types				
ITEM	QTY	PART No.	DESCRIPTION	WEBLINK
1	1	PA0360	Ø35 DP Prot Stab Vented Perm	http://e-sea.bluelogic.no/main.aspx?page=article&artno=PA0360
2	1	BA5938	Ø35 DP Press Stab 10k Perm	http://e-sea.bluelogic.no/main.aspx?page=article&artno=BA5938
3	1	BA4388	Ø35 DP Rec 10k Perm NPT 1/2"	http://e-sea.bluelogic.no/main.aspx?page=article&artno=BA4388
4	1	BA3732	Ø35 DP Prot Stab Perm 10Bar	http://e-sea.bluelogic.no/main.aspx?page=article&artno=BA3732

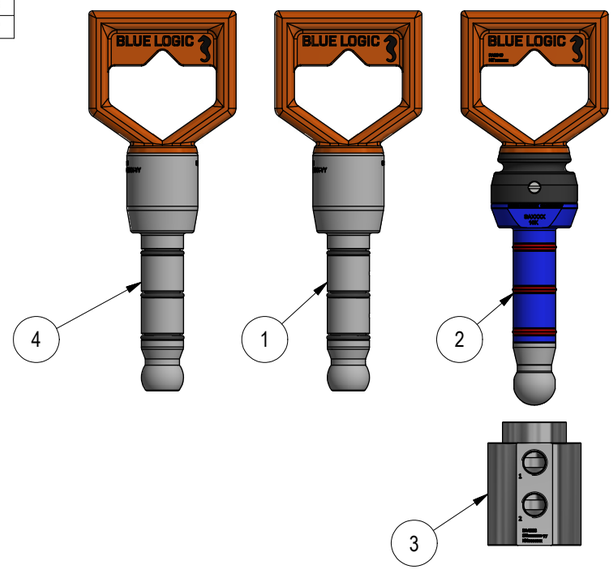

PERMANENT TYPES

FOR INFORMATION ONLY

Rev.	Date	Reason for issue	Revision change	Made	Chk'd	Appr.
01	29.6.2018	3-IFI (Issued for Information)		WTJ		

BLUE LOGIC

Dwg Scale: NTS
Dwg Proj:
Dwg Format: A3

Drawing title: Ø35 DP Stab & Rec Overview

Drawing number: BB2085

Rev. 01