Parts List - Intervention Type				
ITEM	QTY	PART No.	DESCRIPTION	WEBLINK
1	1	PA0371	Ø35 SP Stab 10k Interv wCV BSP 3/8" ID6mm	http://e-sea.bluelogic.no/main.aspx?page=article&artno=PA0371
2	1	BA8211	Ø35 SP Rec 10k Interv WL BSP 1/2"	http://e-sea.bluelogic.no/main.aspx?page=article&artno=BA8211
3	1	BA2406	Ø35 SP Stab 10k Interv WL BSP 1/2" ID13mm	http://e-sea.bluelogic.no/main.aspx?page=article&artno=BA2406
4	1	BA1574	Ø35 SP Stab 10k Interv BSP 1/2" ID13mm	http://e-sea.bluelogic.no/main.aspx?page=article&artno=BA1574
5	1	BA1072	Ø35 SP Press Stab 10k Interv	http://e-sea.bluelogic.no/main.aspx?page=article&artno=BA1072
6	1	BA1071	Ø35 SP Rec 10K Interv wCW BSP 1/2" ID8mm	http://e-sea.bluelogic.no/main.aspx?page=article&artno=BA1071
7	1	BA1045	Ø35 SP Rec 10k Interv BSP 1/2"	http://e-sea.bluelogic.no/main.aspx?page=article&artno=BA1045

NOTE: 1
DESIGN CODE:
API 17H Type 1 Ø35 SP

NOTE: 2
ADDITIONAL INFORMATION:
Standard Hydraulic Interfaces

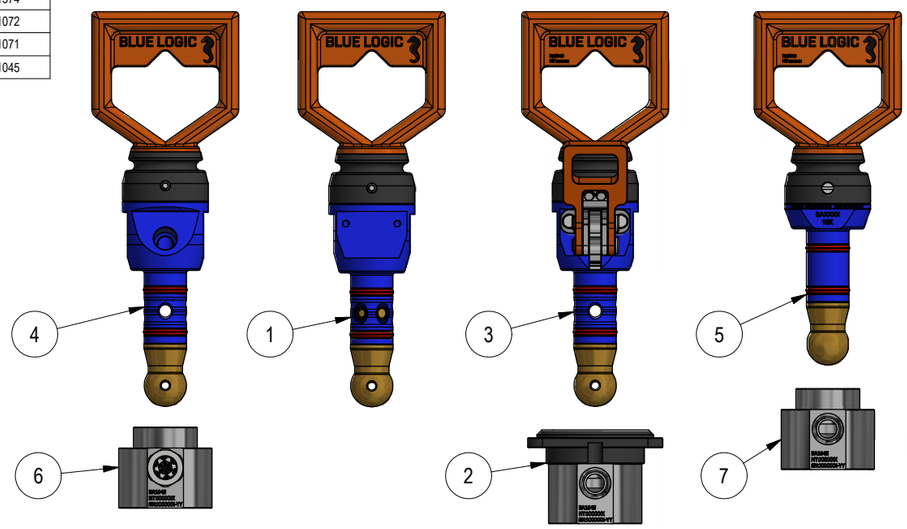

INTERVENTION TYPES

Parts List - Permanent Type				
ITEM	QTY	PART No.	DESCRIPTION	WEBLINK
1	1	BA8368	Ø35 SP Press Stab 10k Perm w. Lock Interf.	http://e-sea.bluelogic.no/main.aspx?page=article&artno=BA8368
2	1	BA8180	Ø35 SP Press Stab 10k Perm WL	http://e-sea.bluelogic.no/main.aspx?page=article&artno=BA8180
3	1	BA3888	Ø35 SP Stab 10k Perm WL NPT 1/2" ID13mm	http://e-sea.bluelogic.no/main.aspx?page=article&artno=BA3888
4	1	BA3863	Ø35 SP Press Stab 10k Perm	http://e-sea.bluelogic.no/main.aspx?page=article&artno=BA3863
5	1	BA3730	Ø35 SP Prot Stab Perm 10Bar	http://e-sea.bluelogic.no/main.aspx?page=article&artno=BA3730
6	1	BA2369	Ø35 SP Rec 10k Perm WL MP 3/8"	http://e-sea.bluelogic.no/main.aspx?page=article&artno=BA2369
7	1	BA2368	Ø35 SP Rec 10k Perm MP 3/8"	http://e-sea.bluelogic.no/main.aspx?page=article&artno=BA2368
8	1	BA1032	Ø35 SP Prot Stab Vented Perm	http://e-sea.bluelogic.no/main.aspx?page=article&artno=BA1032

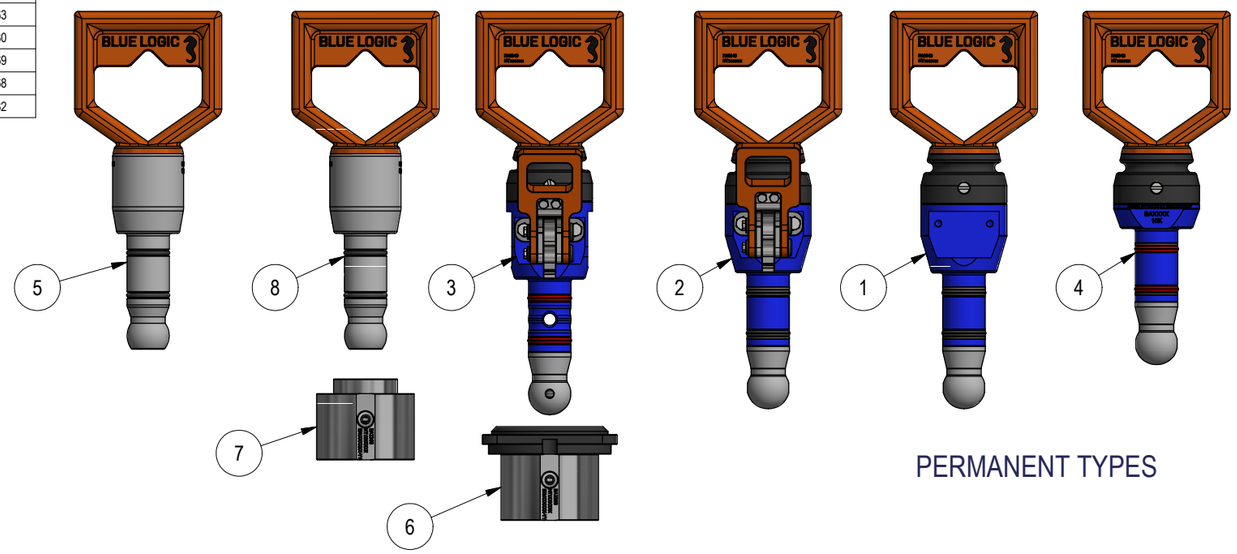

PERMANENT TYPES

FOR INFORMATION ONLY

Rev.	Date	Reason for issue	Revision change	Made	Chk'd	Appr.
01	28.6.2018	3-IFI (Issued for Information)		WTJ		

BLUE LOGIC

Dwg Scale: NTS
Dwg Proj:
Dwg Format: A3

Drawing title: Ø35 SP Stab & Rec Overview

Drawing number: BB2081

Rev. 01