Parts List - Intervention Types				
ITEM	QTY	PART No.	DESCRIPTION	WEBLINK
1	1	BA8394	Ø43 SP Rec 10k Interv WL BSP 3/4" ID17,5mm w/fishtail	http://e-sea.bluelogic.no/main.aspx?page=article&artno=BA8394
2	1	BA7545	Ø43 SP Stab 5k Interv NPT 1 1/4" ID 17,5mm	http://e-sea.bluelogic.no/main.aspx?page=article&artno=BA7545
3	1	BA6736	Ø43 SP Stab 10k Interv BSP 1" ID 17,5mm	http://e-sea.bluelogic.no/main.aspx?page=article&artno=BA6736
4	1	BA6653	Ø43 SP Rec 10k Interv WL BSP 3/4" ID17,5mm	http://e-sea.bluelogic.no/main.aspx?page=article&artno=BA6653
5	1	BA6652	Ø43 SP Rec 10k Interv BSP 3/4" ID17,5mm	http://e-sea.bluelogic.no/main.aspx?page=article&artno=BA6652
6	1	BA6262	Ø43 SP Stab 5K Interv wCV WL BSP 1/2" ID11mm	http://e-sea.bluelogic.no/main.aspx?page=article&artno=BA6262
7	1	BA5853	Ø43 SP Stab 10k Interv WL BSP 1" ID 17,5mm	http://e-sea.bluelogic.no/main.aspx?page=article&artno=BA5853
8	1	BA4473	Ø43 SP Rec 5k Interv WL NPT 1 1/4" ID17,5mm	http://e-sea.bluelogic.no/main.aspx?page=article&artno=BA4473
9	1	BA4472	Ø43 SP Rec 5k Interv NPT 1" ID17,5mm	http://e-sea.bluelogic.no/main.aspx?page=article&artno=BA4472
10	1	BA4469	Ø43 SP Stab 5K Interv WL NPT 1 1/4" ID 17,5mm	http://e-sea.bluelogic.no/main.aspx?page=article&artno=BA4469
11	1	BA2221	Ø43 SP Stab 5K Interv wCV BSP 1/2" ID11mm	http://e-sea.bluelogic.no/main.aspx?page=article&artno=BA2221

NOTE: 1
DESIGN CODE:
API 17H Type 1 Ø43 SP

NOTE: 2
ADDITIONAL INFORMATION:
Standard Hydraulic Interfaces

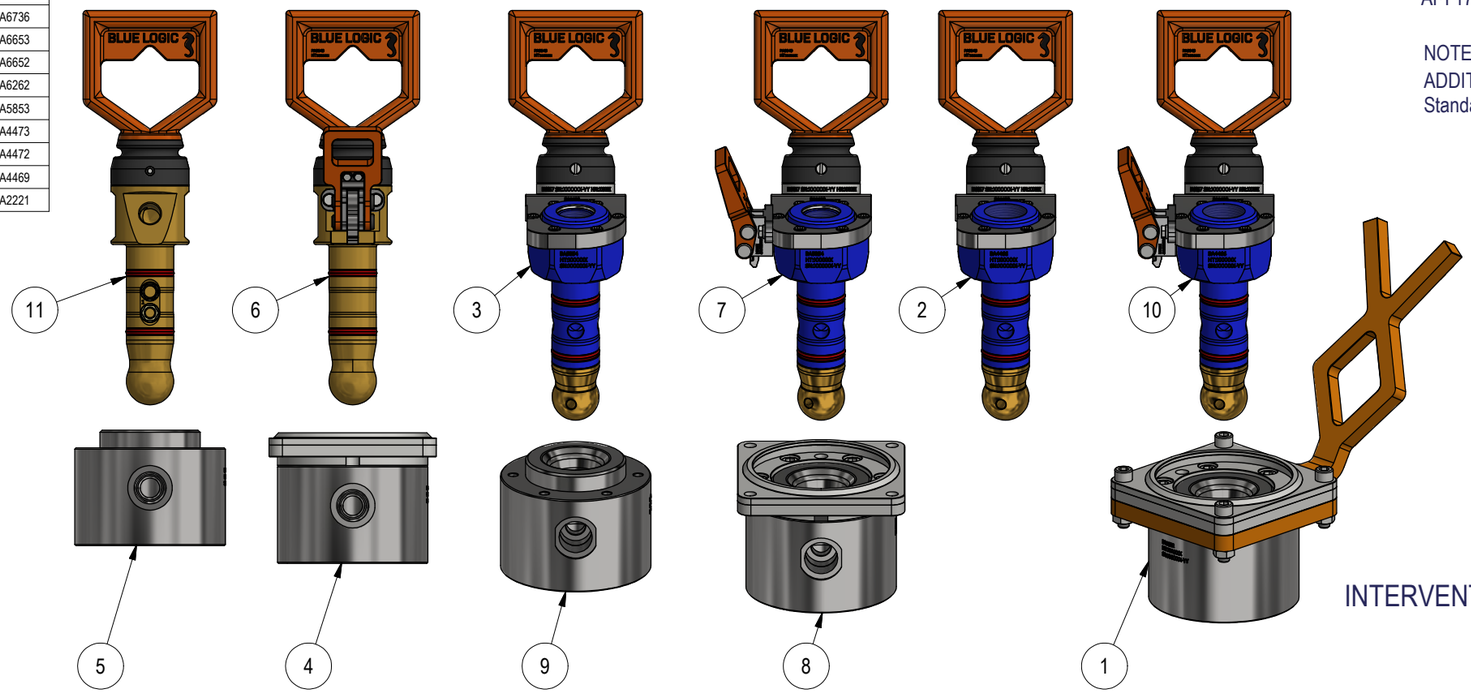

INTERVENTION TYPES

Parts List				
ITEM	QTY	PART No.	DESCRIPTION	WEBLINK
1	1	BA3738	ISO A SP Prot Stab Perm 10Bar	http://e-sea.bluelogic.no/main.aspx?page=article&artno=BA3738
2	1	BA4025	ISO A SP Prot Stab Vented Perm	http://e-sea.bluelogic.no/main.aspx?page=article&artno=BA4025
3	1	BA2901	ISO A SP Press Stab 10K Perm	http://e-sea.bluelogic.no/main.aspx?page=article&artno=BA2901
4	1	BA4950	ISO A SP Press Stab 10K Perm w/ back up rings	http://e-sea.bluelogic.no/main.aspx?page=article&artno=BA4950
5	1	BA4841	ISO A SP Park Rec Vented Perm	http://e-sea.bluelogic.no/main.aspx?page=article&artno=BA4841

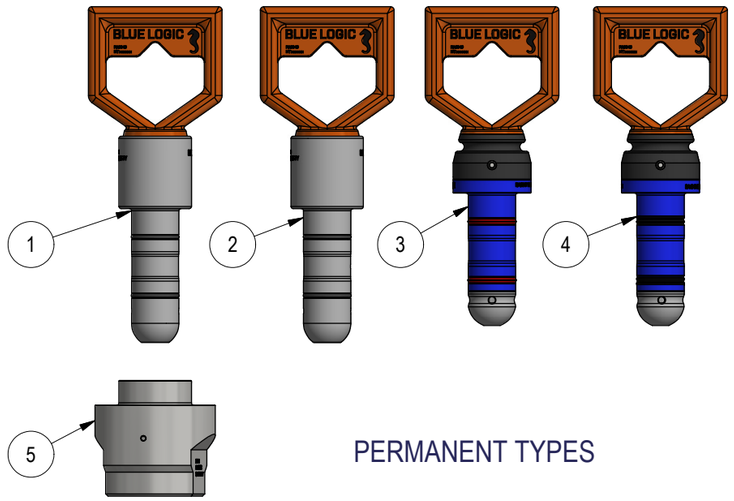

PERMANENT TYPES

FOR INFORMATION ONLY

Rev.	Date	Reason for issue	Revision change	Made	Chk'd	Appr.
01	29.6.2018	3-IFI (Issued for Information)		WTJ		

BLUE LOGIC

Dwg Scale: NTS
Dwg Proj:
Dwg Format: A3

Drawing title: Ø43 SP Stab & Rec Overview

Drawing number: BB2089

Rev. 01