Parts List - Intervention Types				
ITEM	QTY	PART No.	DESCRIPTION	WEBLINK
1	1	BA6227	Ø43 TP Rec 10k Interv WL BSP 1/2" ID7mm	http://e-sea.bluelogic.no/main.aspx?page=article&artno=BA6227
2	1	BA6208	Ø43 TP Stab 5k Interv wCV WL BSP 3/8"	http://e-sea.bluelogic.no/main.aspx?page=article&artno=BA6208
3	1	BA5259	Ø43 TP Rec 10K Interv wCV 0,5-0,5 BSP 1/2" ID7mm	http://e-sea.bluelogic.no/main.aspx?page=article&artno=BA5259
4	1	BA5258	Ø43 TP Stab 5k Interv wCV 0,5-0,5 BSP 3/8" ID8,5mm	http://e-sea.bluelogic.no/main.aspx?page=article&artno=BA5258
5	1	BA3990	Ø43 TP Rec 10K Interv wCV BSP 1/2" ID7mm	http://e-sea.bluelogic.no/main.aspx?page=article&artno=BA3990
6	1	BA3988	Ø43 TP Rec 10k Interv BSP 1/2"	http://e-sea.bluelogic.no/main.aspx?page=article&artno=BA3988
7	1	BA1060	Ø43 TP Stab 5k Interv wCV BSP 3/8" ID8,5mm	http://e-sea.bluelogic.no/main.aspx?page=article&artno=BA1060

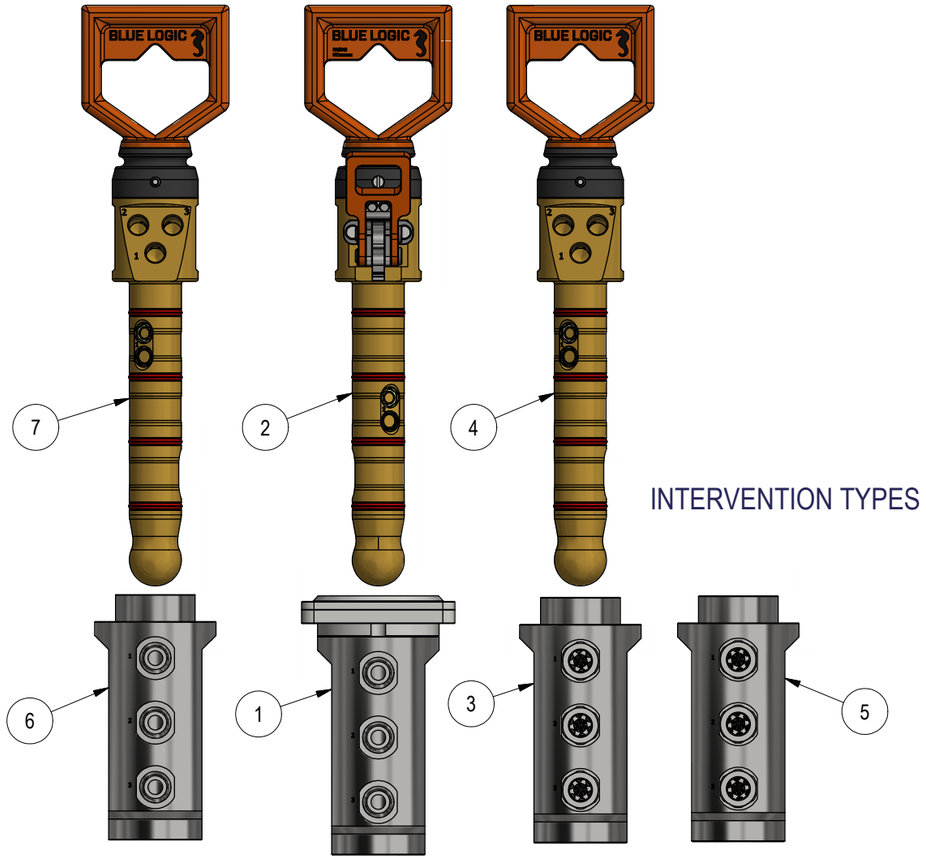

INTERVENTION TYPES

NOTE: 1
DESIGN CODE:
API 17H Type 1 Ø43 TP

NOTE: 2
ADDITIONAL INFORMATION:
Standard Hydraulic Interfaces

Parts List - Permanent Types				
ITEM	QTY	PART No.	DESCRIPTION	WEBLINK
1	1	BA3742	Ø43 TP Prot Stab 10Bar Perm	http://e-sea.bluelogic.no/main.aspx?page=article&artno=BA3742
2	1	BA3183	Ø43 TP Press Stab 10k Perm	http://e-sea.bluelogic.no/main.aspx?page=article&artno=BA3183
3	1	BA1781	Ø43 TP Prot Stab Vented Perm	http://e-sea.bluelogic.no/main.aspx?page=article&artno=BA1781

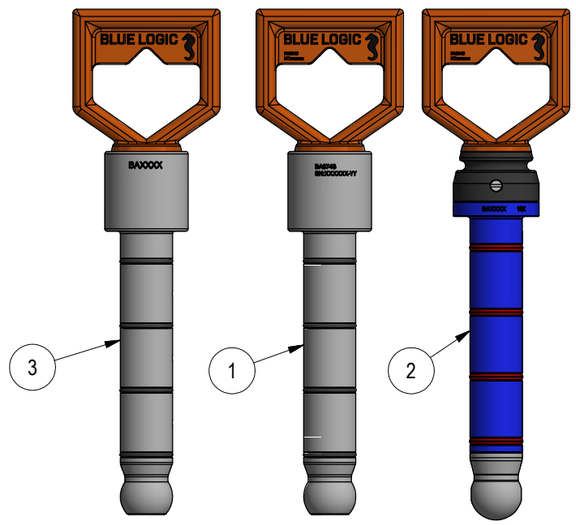

PERMANENT TYPES

FOR INFORMATION ONLY

Rev.	Date	Reason for issue	Revision change	Made	Chk'd	Appr.
01	29.6.2018	3-IFI (Issued for Information)		WTJ		

BLUE LOGIC

Dwg Scale: NTS
Dwg Proj:
Dwg Format: A3

Drawing title: Ø43 TP Stab & Rec Overview

Drawing number: BB2092

Rev. 01