Parts List - Intervention Types				
ITEM	QTY	PART No.	DESCRIPTION	WEBLINK
1	1	BA5930	Ø28/35 QP Rec 12K Interv wCV BSP 1/4" (FMC Interf)	http://e-sea.bluelogic.no/main.aspx?page=article&artno=BA5930
2	1	BA5928	Ø28/35 QP Rec 12K Interv BSP 1/4" (FMC Interf)	http://e-sea.bluelogic.no/main.aspx?page=article&artno=BA5928
3	1	BA5900	Ø28/35 QP Stab 10k Interv BSP 1/4" (FMC Interface)	http://e-sea.bluelogic.no/main.aspx?page=article&artno=BA5900
4	1	BA1661	Ø28/35 QP Stab 12k Interv wCV 1/4" FMC	http://e-sea.bluelogic.no/main.aspx?page=article&artno=BA1661

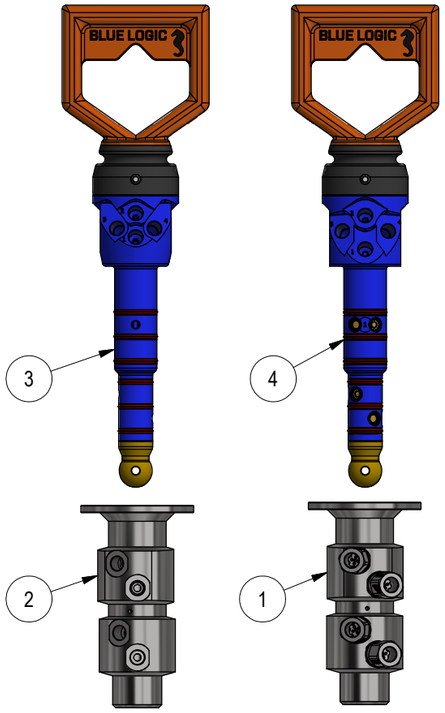

INTERVENTION TYPES

NOTE: 1
DESIGN CODE:
API 17H Type 2 Ø28/35

NOTE: 2
ADDITIONAL INFORMATION:
Standard Hydraulic Interfaces

Parts List - Permanent Types				
ITEM	QTY	PART No.	DESCRIPTION	WEBLINK
1	1	BA5977	Ø28/35 QP Prot Stab Vented Perm FMC	http://e-sea.bluelogic.no/main.aspx?page=article&artno=BA5977

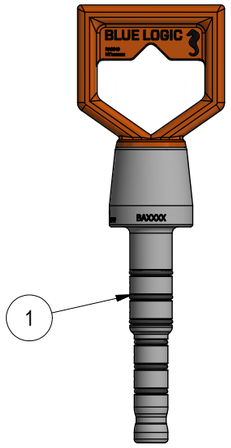

PERMANENT TYPE

FOR INFORMATION ONLY

Rev.	Date	Reason for issue	Revision change	Made	Chk'd	Appr.
01	2.7.2018	3-IFI (Issued for Information)		WTJ		

BLUE LOGIC

Dwg Scale: NTS
Dwg Proj:
Dwg Format: A3

Drawing title: Ø28/35 Stab & Rec Overview

Drawing number: BB2096

Rev. 01