Parts List				
ITEM	QTY	PART No.	TITLE	WEBLINK
1	1	PA0049	D-Handle	http://e-sea.bluelogic.no/main.aspx?page=article&artno=PA0049
2	1	BA8060	Bolt for D-handle	http://e-sea.bluelogic.no/main.aspx?page=article&artno=BA8060
3	1	BA8019	ROV Handle Bracket Ø200	http://e-sea.bluelogic.no/main.aspx?page=article&artno=BA8019
4	1	BA8015	ROV Handle for Ø200 SP Stab Welding Assy	http://e-sea.bluelogic.no/main.aspx?page=article&artno=BA8015
5	1	BA8014	Guide Nose Ø200	http://e-sea.bluelogic.no/main.aspx?page=article&artno=BA8014
6	1	BA7347	Lock for Stab	http://e-sea.bluelogic.no/main.aspx?page=article&artno=BA7347
7	1	BA5216	D-handle assy Ø150 Press Stab	http://e-sea.bluelogic.no/main.aspx?page=article&artno=BA5216
8	1	BA5214	Pipe for Stabber Nose	http://e-sea.bluelogic.no/main.aspx?page=article&artno=BA5214
9	1	BA5211	J-Lock Bolt Ø150	http://e-sea.bluelogic.no/main.aspx?page=article&artno=BA5211
10	1	BA2958	Lock Bolt for D-Handle	http://e-sea.bluelogic.no/main.aspx?page=article&artno=BA2958
11	1	BA1823	J-Lock Bolt	http://e-sea.bluelogic.no/main.aspx?page=article&artno=BA1823
12	1	101693	O-Ring	
13	1	101407	Stab Seal	

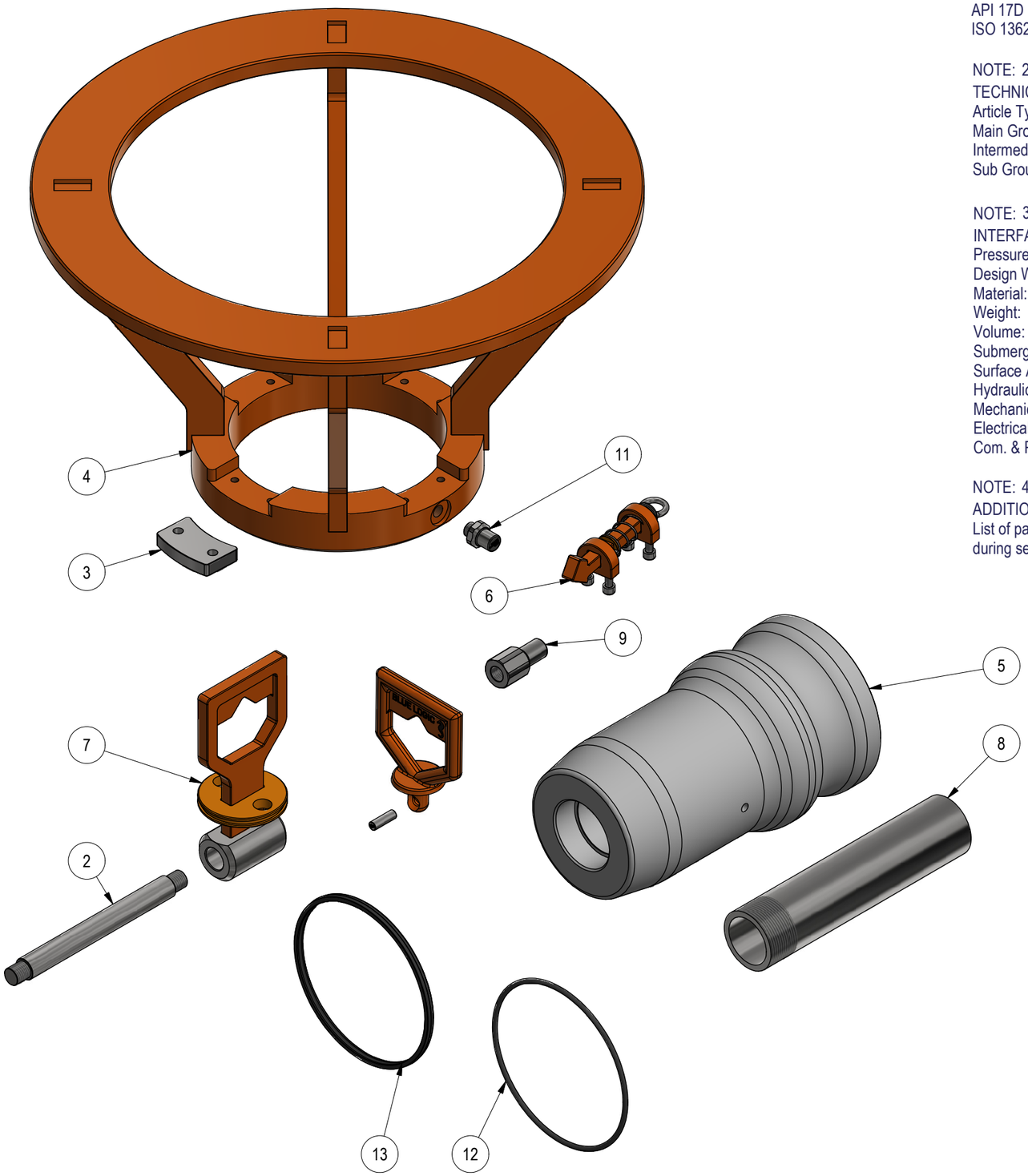

NOTE: 1
DESIGN CODE:
API 17D
ISO 13628-8

NOTE: 2
TECHNICAL CLASSIFICATION:

Article Type:	001-Hotstabs
Main Group:	1.00. Misc-Hotstab
Intermediate Group:	1.51.9. Spares
Sub Group:	1.51.152.5. Service Parts

NOTE: 3
INTERFACE INFORMATION:

Pressure Rating Bar:	N/A
Design Water Depth:	N/A
Material:	N/A
Weight:	60,5 kg
Volume:	14 dm^3
Submerged Weight:	46,19 kg
Surface Area:	13765 cm^2
Hydraulic:	N/A
Mechanical:	N/A
Electrical:	N/A
Com. & Protocol:	N/A

NOTE: 4
ADDITIONAL INFORMATION:
List of parts that can be maintained by certified personel, during service.

Rev.	Date	Reason for issue		Made	Chk'd	Appr.
01	12.12.2017	8-ASB (As-Built)	Revision change	WTJ	HNJ	WTJ

BLUE LOGIC

Dwg Scale:
Dwg Proj:
Dwg Format: A3

Drawing title: Ø200 Stab Service Part Overview

Drawing number: BB1048

Rev. 01