Parts List			
ITEM	PART No.	TITLE	WEBLINK
1	PA0049	D-Handle	http://e-sea.bluelogic.no/main.aspx?page=article&artno=PA0049
2	PA0050	Flex Element	http://e-sea.bluelogic.no/main.aspx?page=article&artno=PA0050
3	PA0051	Lock Bolt For Flex Handle	http://e-sea.bluelogic.no/main.aspx?page=article&artno=PA0051
4	PA0437	Lock for Stab	http://e-sea.bluelogic.no/main.aspx?page=article&artno=PA0437
5	BA1491	Nose for Ø55 Stab	http://e-sea.bluelogic.no/main.aspx?page=article&artno=BA1491
6	100201	O-Ring	
7	100159	Back Up Ring	
8	100122	Stab Seal	

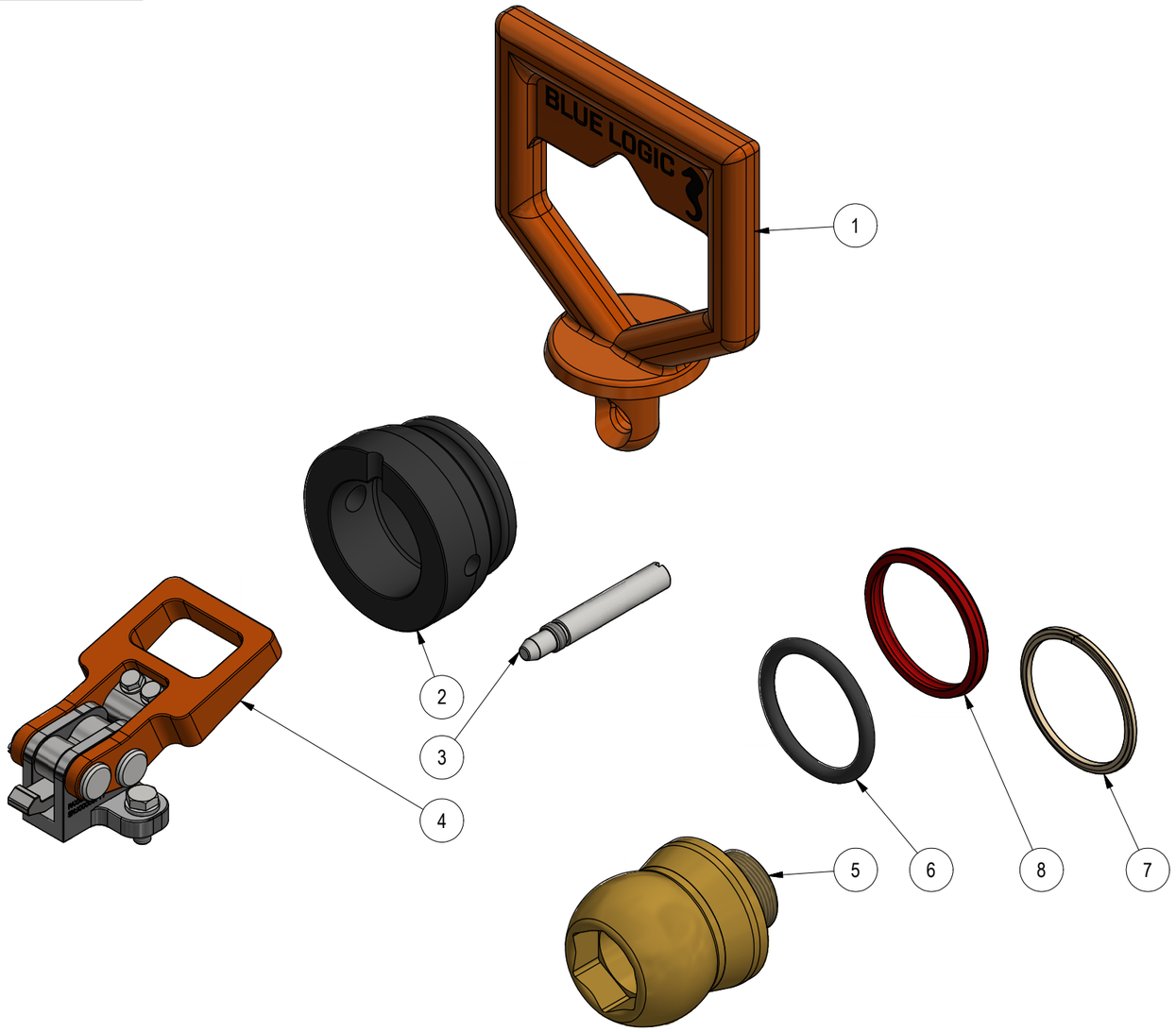

NOTE: 1
DESIGN CODE:
API 17D
ISO 13628-8

NOTE: 2
TECHNICAL CLASSIFICATION:

Article Type:	001-Hotstabs
Main Group:	1.00. Misc-Hotstab
Intermediate Group:	1.51.9. Spares
Sub Group:	1.51.152.5. Service Parts

NOTE: 3
INTERFACE INFORMATION:

Pressure Rating Bar:	N/A
Design Water Depth:	N/A
Material:	N/A
Weight:	2,2 kg
Volume:	0,35 dm^3
Submerged Weight:	1,8 kg
Surface Area:	1093 cm^2
Hydraulic:	N/A
Mechanical:	N/A
Electrical:	N/A
Com. & Protocol:	N/A

NOTE: 4
ADDITIONAL INFORMATION:
List of parts that can be maintained by certified personel, during service.

Rev.	Date	Reason for issue	Revision change	Made	Chk'd	Appr.
02	13.4.2018	9-IFU (Issued for Use)		WTJ	N/A	N/A
01	26.6.2014	9-IFU (Issued for Use)		WTJ	HNJ	WTJ

BLUE LOGIC

Dwg Scale: NTS
Dwg Proj:
Dwg Format: A3

Drawing title: Ø55 Stab Service Part Overview

Drawing number: BA5292

Rev. 02