Parts List			
ITEM	PART No.	TITLE	WEBLINK
1	PA0088	2-Way Check Valves 10k Interv BSP 1/2" - 2,0-0,5 Bar FM-M	http://e-sea.bluelogic.no/main.aspx?page=article&artno=PA0088
2	BA1442	2-Way Check Valve 10k Interv BSP 1/2" - 0,5-0,5 Bar FM-M	http://e-sea.bluelogic.no/main.aspx?page=article&artno=BA1442
3	BA6570	Adapter Plates wLock Interface Ø43	http://e-sea.bluelogic.no/main.aspx?page=article&artno=BA6570
4	BA6571	Adapter Plates wLock Interface Ø43 Perm	http://e-sea.bluelogic.no/main.aspx?page=article&artno=BA6571
5	BA5310	Adapter Plates wLock Interface Ø55	http://e-sea.bluelogic.no/main.aspx?page=article&artno=BA5310

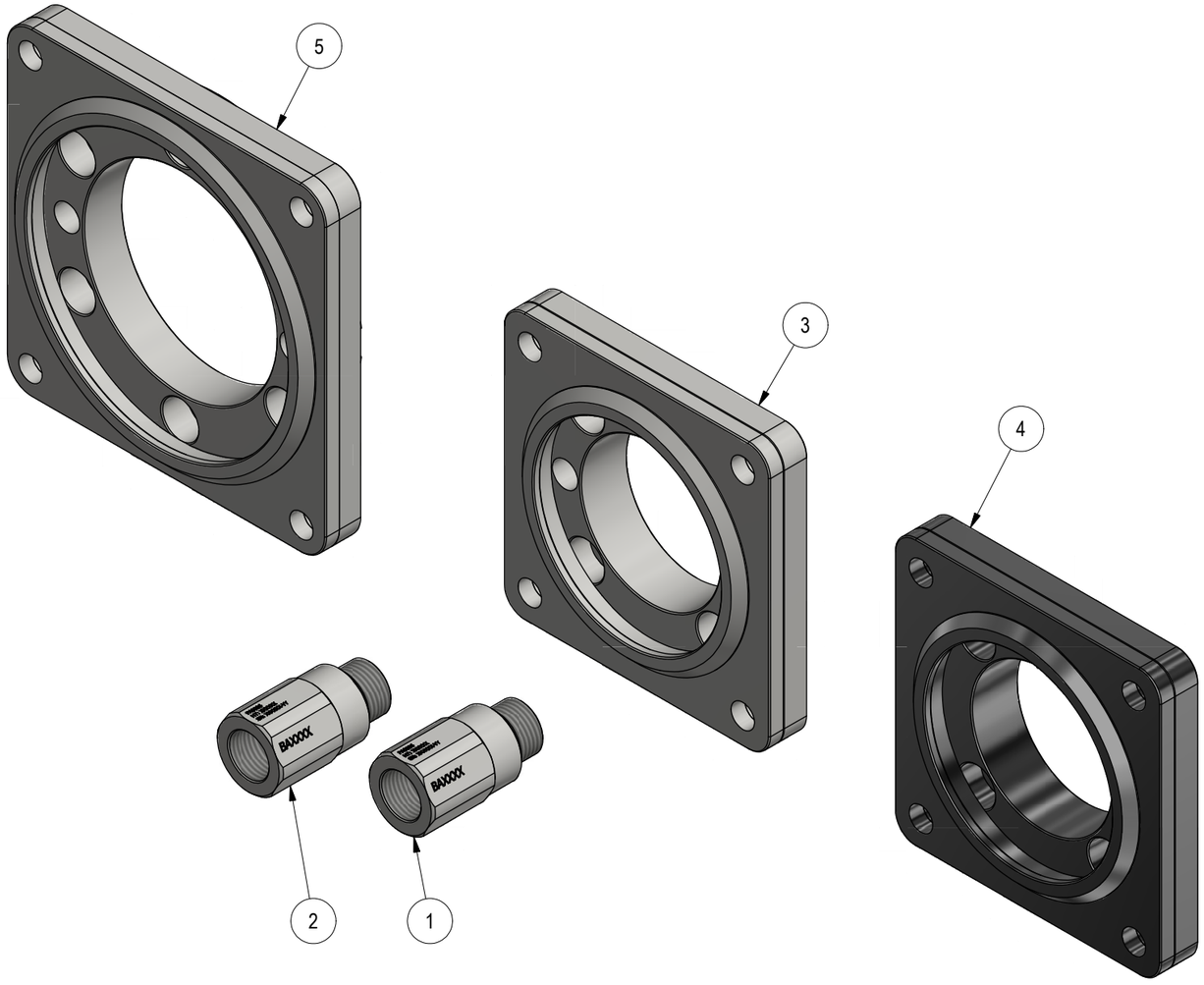

NOTE: 1
DESIGN CODE:
API 17D
ISO 13628-8

NOTE: 2
TECHNICAL CLASSIFICATION:

Article Type:	001-Hotstabs
Main Group:	1.00. Misc-Hotstab
Intermediate Group:	1.51.9. Spares
Sub Group:	1.51.152.5. Service Parts

NOTE: 3
INTERFACE INFORMATION:

Pressure Rating Bar:	N/A
Design Water Depth:	N/A
Material:	N/A
Weight:	6,1 kg
Volume:	0,78 dm^3
Submerged Weight:	5,3 kg
Surface Area:	2445 cm^2
Hydraulic:	N/A
Mechanical:	N/A
Electrical:	N/A
Com. & Protocol:	N/A

NOTE: 4
ADDITIONAL INFORMATION:
List of parts that can be maintained by certified personel, during service.

Rev.	Date	Reason for issue	Revision change	Made	Chk'd	Appr.
01	26.6.2014	9-IFU (Issued for Use)		WTJ	HNJ	WTJ

BLUE LOGIC

Dwg Scale: NTS
Dwg Proj:
Dwg Format: A3

Drawing title: Ø43 Rec Service Part Overview

Drawing number: BA5289

Rev. 01