Parts List				
ITEM	QTY	PART No.	DESCRIPTION	WEBLINK
1	1	PA0057	Flex-Joint Base With PDC Ø56mm	http://e-sea.bluelogic.no/main.aspx?page=article&artno=PA0057
2	1	PA0051	Lock Bolt For Flex Handle	http://e-sea.bluelogic.no/main.aspx?page=article&artno=PA0051
3	1	PA0050	Flex Element	http://e-sea.bluelogic.no/main.aspx?page=article&artno=PA0050
4	1	PA0049	D-Handle	http://e-sea.bluelogic.no/main.aspx?page=article&artno=PA0049

NOTE: 1
DESIGN CODE:
N/A

NOTE: 2
TECHNICAL CLASSIFICATION:

Article Type:	002-ROV handels
Main Group:	2.01. Stab-Handel
Intermediate Group:	2.7.02. D-Handle
Sub Group:	2.7.47.01. Intervention

NOTE: 3
INTERFACE INFORMATION:

Pressure Rating Bar:	N/A
Design Water Depth:	N/A
Material:	N/A
Weight in Air:	1,4 kg
Volume:	0,25 dm^3
Submerged Weight:	1,15 kg
Surface Area:	681 cm^2
Hydraulic:	N/A
Mechanical:	N/A
Electrical:	N/A
Com. & Protocol:	N/A

Max Torque: 300Nm
Max Axial Pull Force: 12000N
Max Horizontal Force on Outer Edge: 5000N

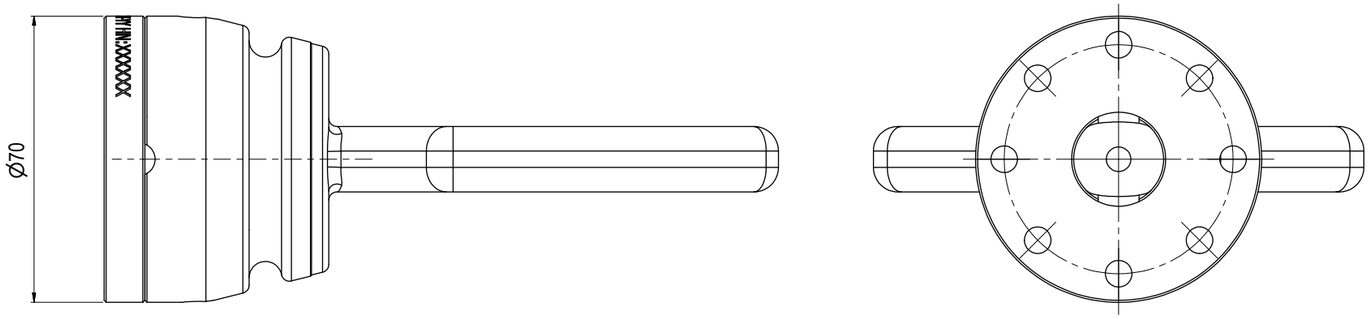

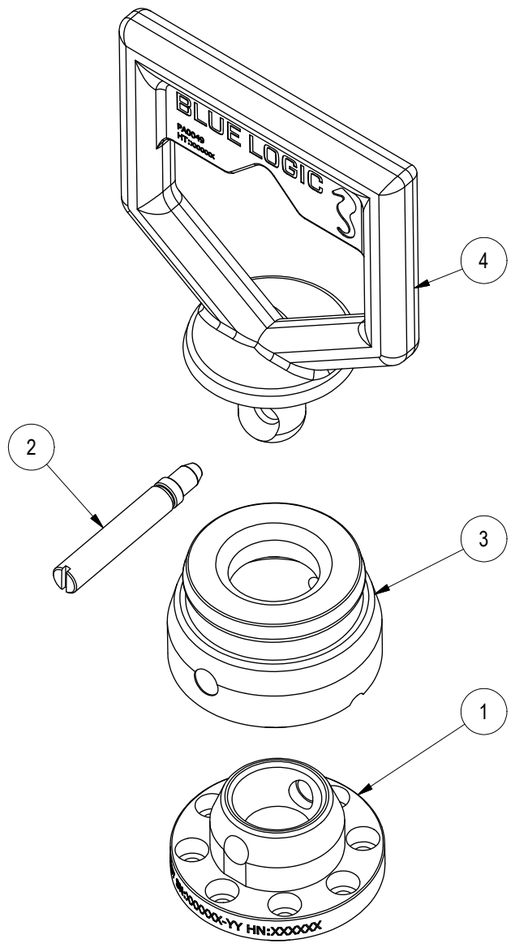

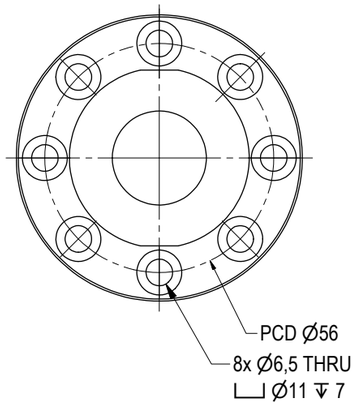

SECTION A-A

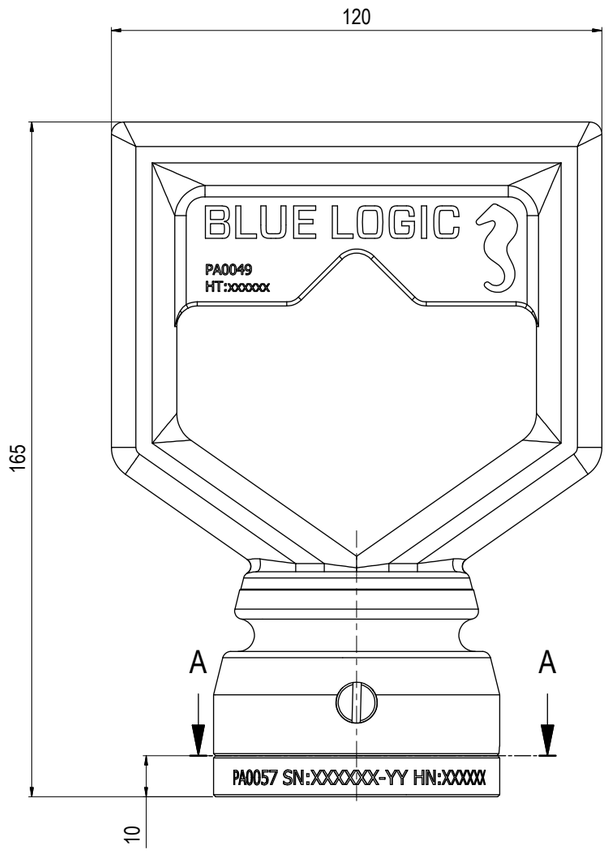

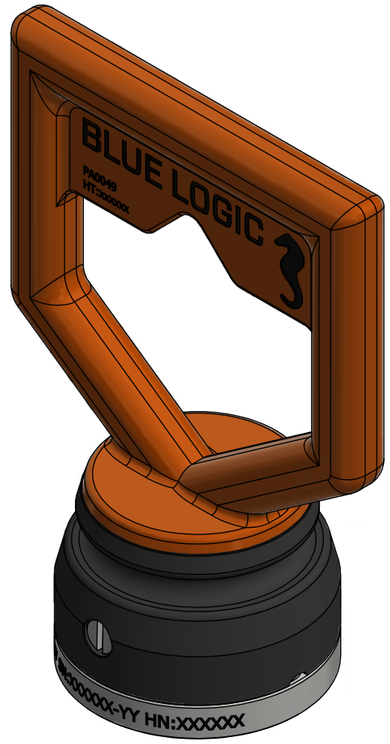

Rev.	Date	Reason for issue	Revision change	Made	Chk'd	Appr.
02	19.5.2014	8-ASB (As-Built)	New view for Interface	WTJ	HNJ	WTJ
01	4.10.2011	8-ASB (As-Built)		LGH	HNJ	LGH

BLUE LOGIC

Dwg Scale: NTS
Dwg Proj:
Dwg Format: A3

Drawing title: Assy D-Handle

Drawing number: BA1959

Rev. 02