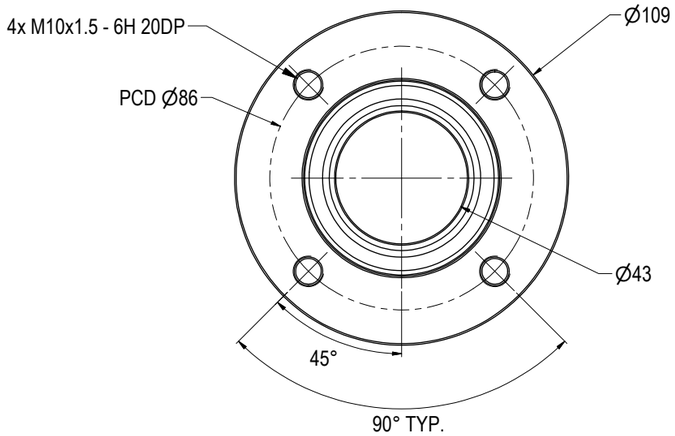

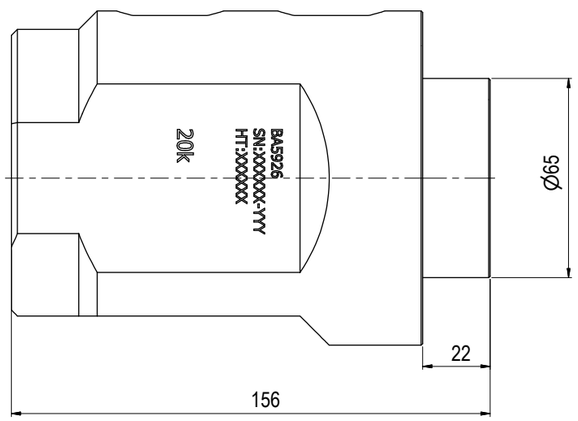

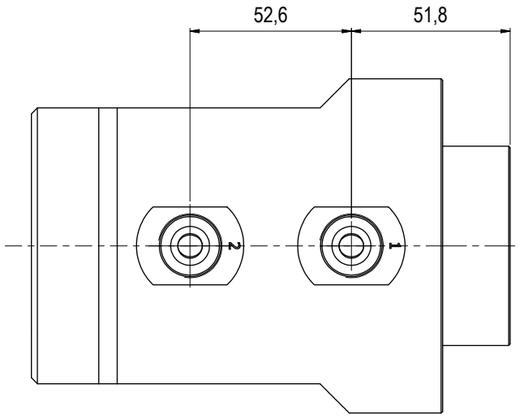

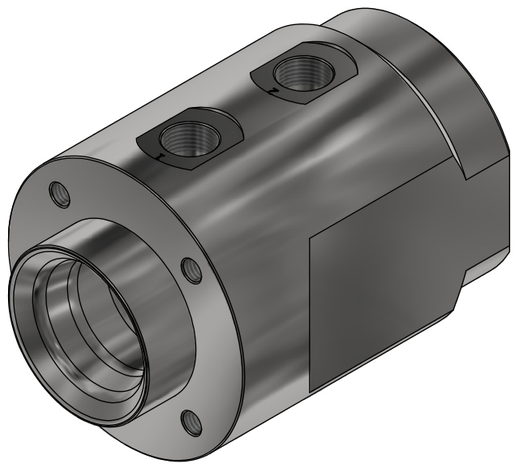

NOTE: 1
DESIGN CODE:
API 17H Type 1
ISO 13628-8

NOTE:
TECHNICAL CLASSIFICATION:

Article Type:	001-Hot Stabs
Main Group:	1.03. Ø43 Hot Stab
Intermediate Group:	1.2.02. Receptacle
Sub Group:	1.2.6.02. Dual

NOTE: 3
INTERFACE INFORMATION:

Pressure Rating Bar:	1380
Material:	S32750 SUPER DUPLEX
Weight:	7,2 kg
Volume:	0,92 dm^3
Surface Area:	882 cm^2
Hydraulic:	MP 9/16"
Mechanical:	4xM10@PCD 86
Electrical:	N/A
Com. & Protocol:	N/A

Rev.	Date	Reason for issue	Revision change	Made	Chk'd	Appr.
02	24.11.2020	9-IFU (Issued for Use)		HNJ	LGH	HNJ
01	11.11.2014	2-IFT (Issued for Tender)		HNJ	NA	NA

BLUE LOGIC

This Drawing is the Property of Blue Logic AS © and must Not be Loaned, Reproduced or Transferred to others without written Permission

Unless Noted Otherwise:	Dwg Scale: NTS	Drawing title: Ø43 DP Rec 20k Long-term MP 9/16"	
Dim. Tol: NS-ISO 2768-1	Dwg Proj:		
Roughness: Ra	Dwg Format: A3		
Fillet Rad: Corner Rmax:	Break Edges: (R. Alt. 45°) R= 0,1-0,5	Drawing number: BA5926	Rev. 02