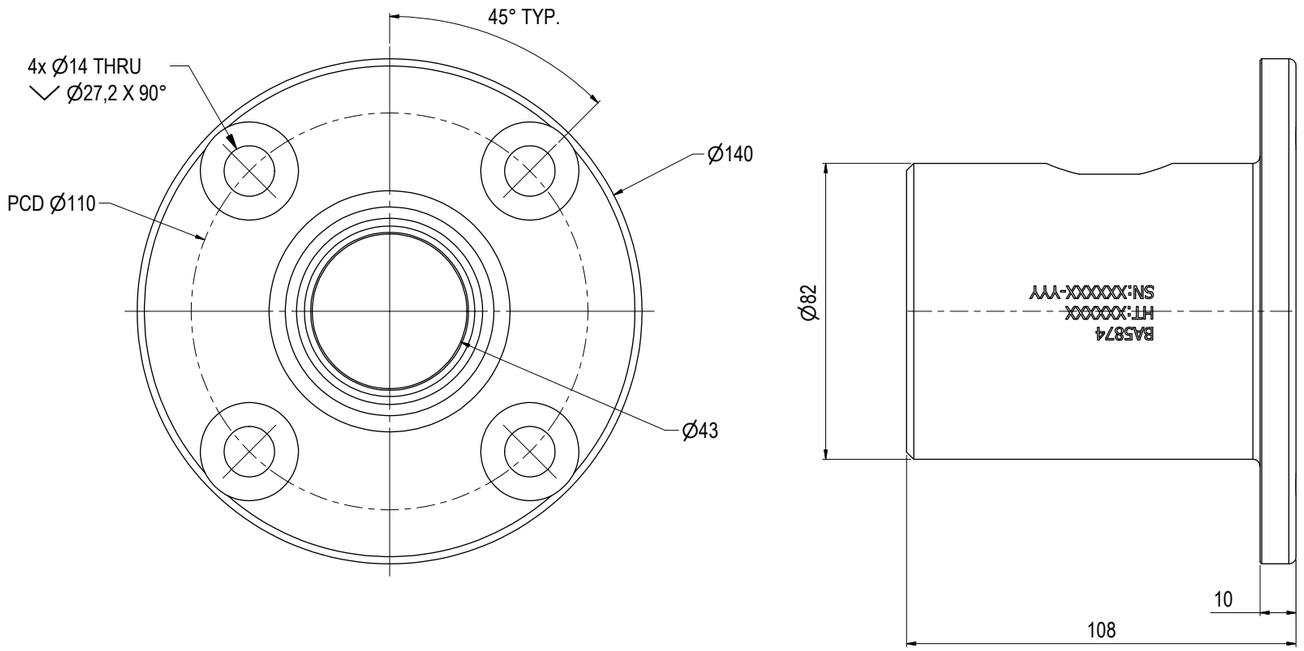

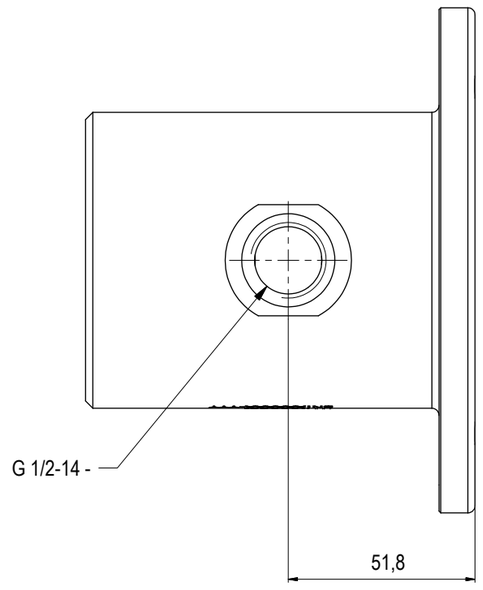

NOTE: 1
DESIGN CODE:
API 17H Type 1

NOTE: 2
TECHNICAL CLASSIFICATION:

Article Type:	001-Hot Stabs
Main Group:	1.03. Ø43 Hot Stab
Intermediate Group:	1.2.02. Receptacle
Sub Group:	1.2.6.01. Single

NOTE: 3
INTERFACE INFORMATION:

Pressure Rating Bar:	690
Material:	S32750 SUPER DUPLEX
Weight:	3,8 kg
Volume:	0,48 dm^3
Surface Area:	711 cm^2
Hydraulic:	BSP 1/2"
Mechanical:	4 X Ø14 Countersunk PCD 110
Electrical:	N/A
Com. & Protocol:	N/A

NOTE: 4
WEB LINK:
http://e-sea.bluelogic.no/main.aspx?page=article&artno=BA5874

NOTE: 5
ADDITIONAL INFORMATION:
All Blue Logic Receptacles is Standardized with BSP Interface. NPT and MP (Autoclave or Similar) Interfaces can be delivered upon request.

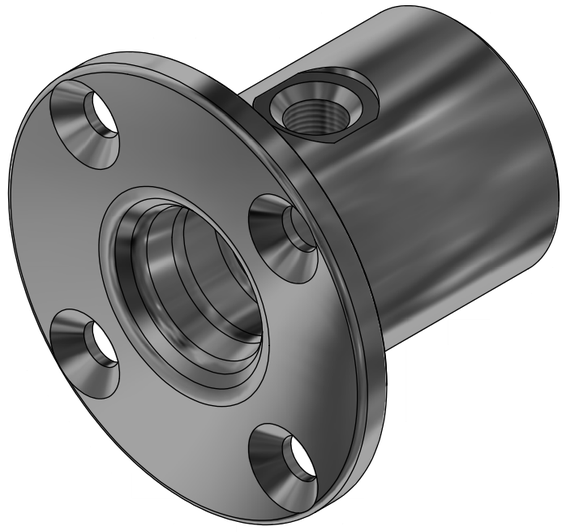

Rev.	Date	Reason for issue	Revision change	Made	Chk'd	Appr.
01	4.11.2014	9-IFU (Issued for Use)		HNJ	LGH	HNJ

BLUE LOGIC

Dwg Scale: NTS
Dwg Proj:
Dwg Format: A3

Drawing title: Ø43 SP Rec 10k Interv BSP 1/2" wFlange

Drawing number: BA5874

Rev. 01