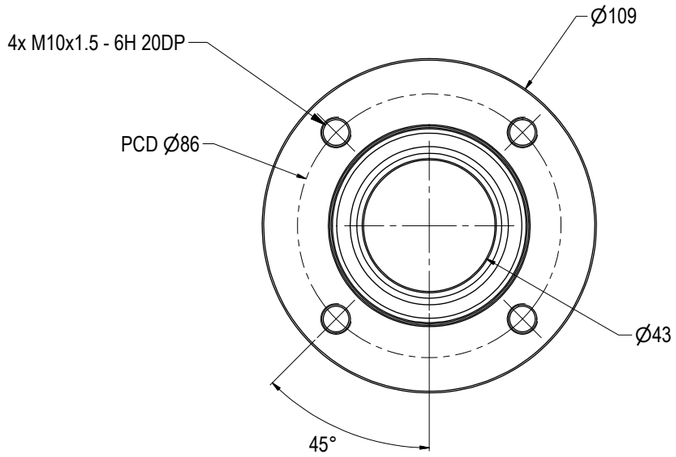

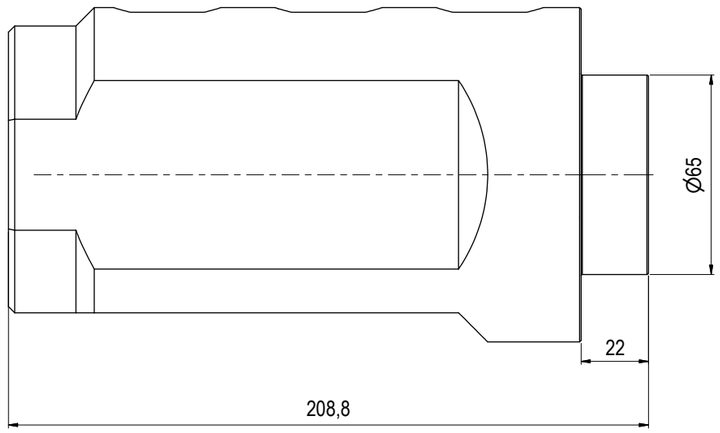

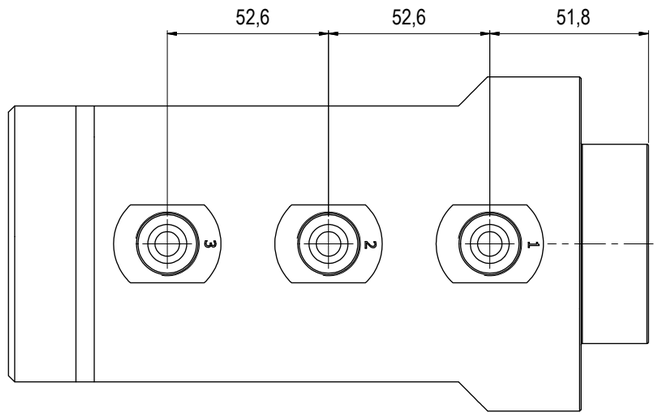

NOTE: 1
DESIGN CODE:
API 17H
ISO 13628-8

NOTE: 2
TECHNICAL CLASSIFICATION:

Article Type:	001-Hot Stabs
Main Group:	1.03. Ø43 Hot Stab
Intermediate Group:	1.2.02. Receptacle
Sub Group:	1.2.6.03. Triple

NOTE: 3
INTERFACE INFORMATION:

Pressure Rating Bar:	1380
Material:	S32750 SUPER DUPLEX
Weight:	9,9 kg
Volume:	1,26 dm^3
Surface Area:	1141 cm^2
Hydraulic:	9/16" MP
Mechanical:	4xM10@PCD 86
Electrical:	N/A
Com. & Protocol:	N/A

NOTE: 4
ADDITIONAL INFORMATION:
All Blue Logic Receptacles is Standardized with BSP Interface. NPT and MP (Autoclave or Similar) Interfaces can be delivered upon request.

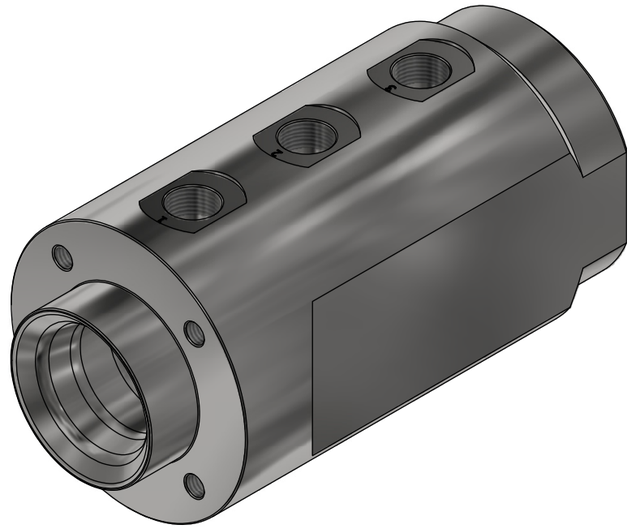

Rev.	Date	Reason for issue	Revision change	Made	Chk'd	Appr.
01	19.11.2021	7-IFC (Issued for Construction)		WTJ	HNJ	WTJ

BLUE LOGIC

Unless Noted Otherwise:	Dwg Scale: NTS	Drawing title: Ø43 TP Rec 20k Long-term MP 9/16"	
Dim. Tol: NS-ISO 2768-1	Dwg Proj:		
Roughness: Ra	Dwg Format: A3		
Fillet Rad: Corner Rmax:	Break Edges: (R. Alt. 45°) R= 0,1-0,5	Drawing number: BA5927	Rev. 01