Parts List				
ITEM	QTY	PART No.	TITLE	WEBLINK
1	1	PA0331	Nose for Ø55 Stab	http://e-sea.bluelogic.no/main.aspx?page=article&artno=PA0331
2	1	PA0051	Lock Bolt For Flex Handle	http://e-sea.bluelogic.no/main.aspx?page=article&artno=PA0051
3	1	PA0050	Flex Element	http://e-sea.bluelogic.no/main.aspx?page=article&artno=PA0050
4	1	PA0049	D-Handle	http://e-sea.bluelogic.no/main.aspx?page=article&artno=PA0049
5	1	BA3437	Rotation Lock And Indicator Valve Stab	http://e-sea.bluelogic.no/main.aspx?page=article&artno=BA3437
6	1	103547	Cartrigde Seal	
7	1	100285	Pin Anode	
8	1	100207	Cartrigde Seal	
9	1	100201	O-Ring	
10	1	100122	Stab Seal	
11	1	100121	Cartrigde Seal	

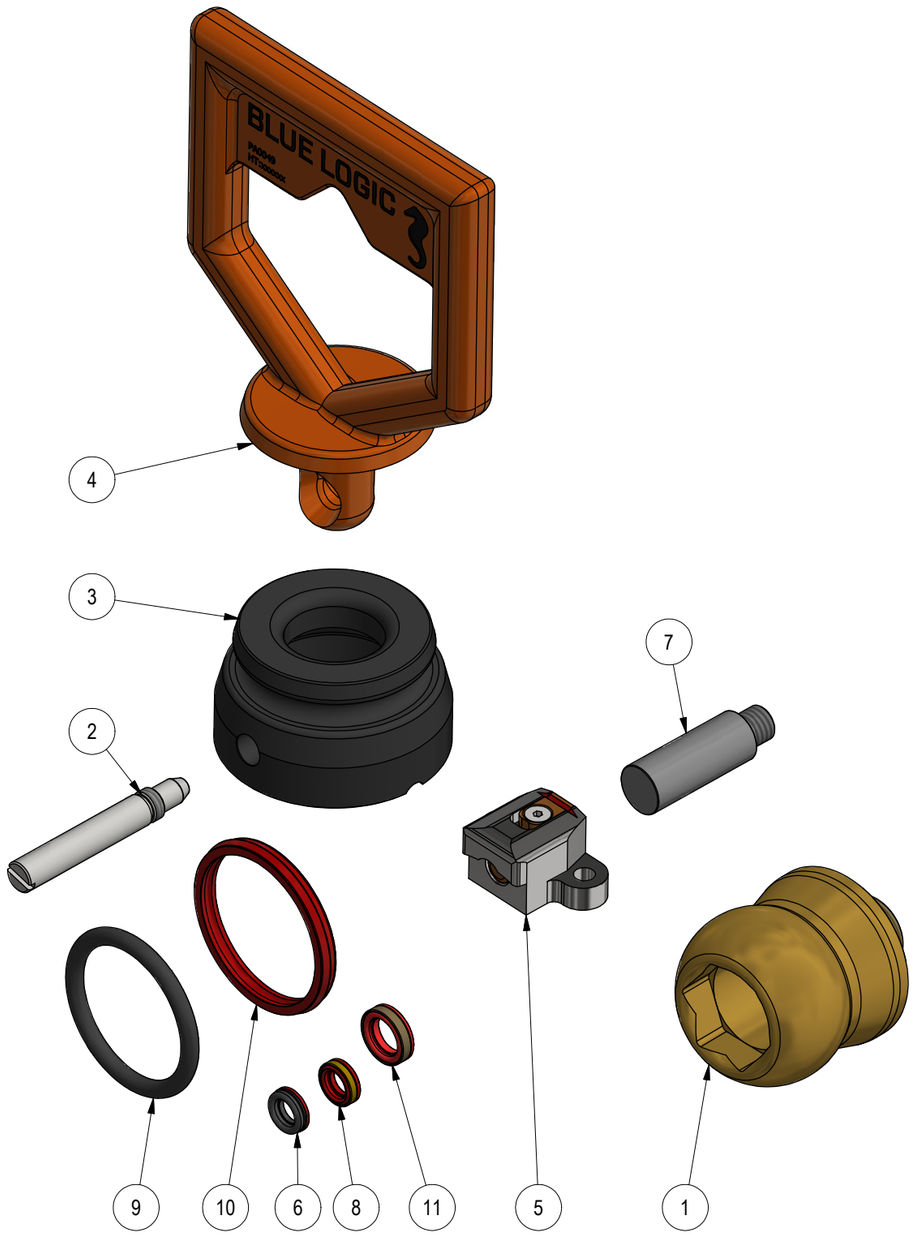

NOTE: 1
DESIGN CODE:
NS-EN 13445

NOTE: 2
TECHNICAL CLASSIFICATION:

Article Type:	003-Valve Stabs
Main Group:	3.00. Misc-Valvestab
Intermediate Group:	3.40.09. Spares
Sub Group:	3.40.94.7. Service Parts

NOTE: 3
INTERFACE INFORMATION:

Pressure Rating Bar:	N/A
Design Water Depth:	N/A
Material:	N/A
Weight:	1,8 kg
Volume:	0,31 dm^3
Submerged Weight:	1,49 kg
Surface Area:	885 cm^2
Hydraulic:	N/A
Mechanical:	N/A
Electrical:	N/A
Com. & Protocol:	N/A

NOTE: 4
ADDITIONAL INFORMATION:
List of parts that can be maintained by certified personel, during service.

Rev.	Date	Reason for issue	Revision change	Made	Chk'd	Appr.
02	19.6.2020	7-IFC (Issued for Construction)		WTJ	HSE	WTJ
01	17.4.2018	9-IFU (Issued for Use)		WTJ	HSE	WTJ

BLUE LOGIC

Dwg Scale: NTS
Dwg Proj:
Dwg Format: A3

Drawing title: Ø55 Vstab Service Part Overview

Drawing number: BB1689

Rev. 02