NOTE: 1
DESIGN CODE:
API 17H/6A

NOTE: 2
TECHNICAL CLASSIFICATION:

Article Type:	001-Hot Stabs
Main Group:	1.01. Ø35 Hot Stab
Intermediate Group:	1.1.04. Pressure
Sub Group:	1.1.4.02. Dual

NOTE: 3
INTERFACE INFORMATION:

Pressure Rating Bar:	690
Material:	Intervention
Weight:	2,6 kg
Volume:	0,41 dm^3
Surface Area:	946 cm^2
Hydraulic:	N/A
Mechanical:	N/A
Electrical:	N/A
Com. & Protocol:	N/A

NOTE: 4
SPAREPARTS:
BA5286

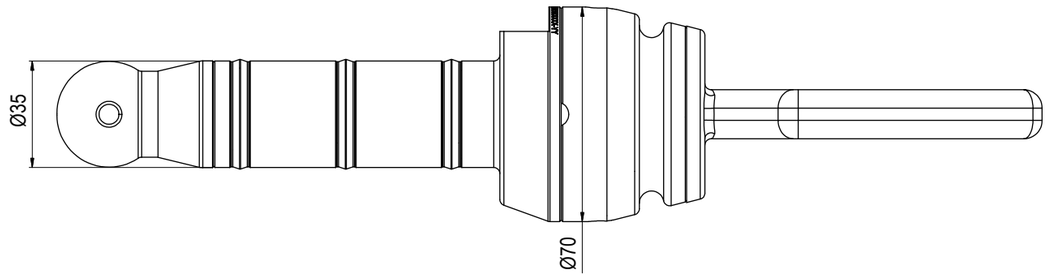

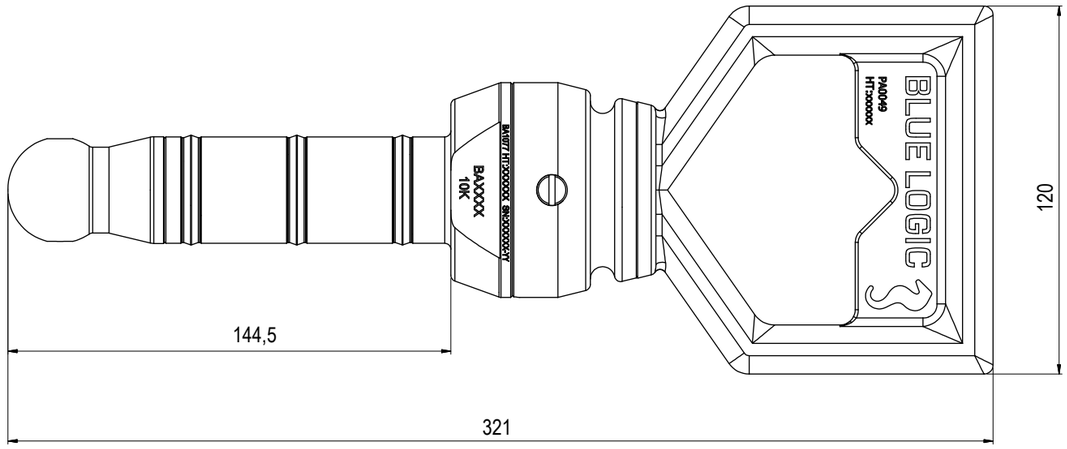

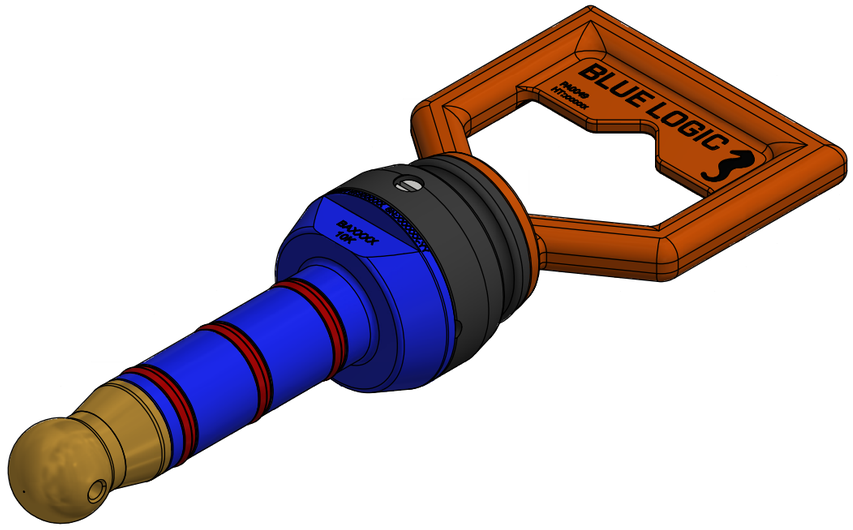

Rev.	Date	Reason for issue	Revision change	Made	Chk'd	Appr.
03	11.4.2014	9-IFU (Issued for Use)		WTJ	HNJ	WTJ
02	30.1.2013	7-IFC (Issued for Construction)		LAE	TBA	LAE
01	3.10.2011			vafhse		

BLUE LOGIC

Dwg Scale: NTS
Dwg Proj:
Dwg Format: A3

Drawing title: Ø35 DP Press Stab 10k Interv

Drawing number: BA1076

Rev. 03