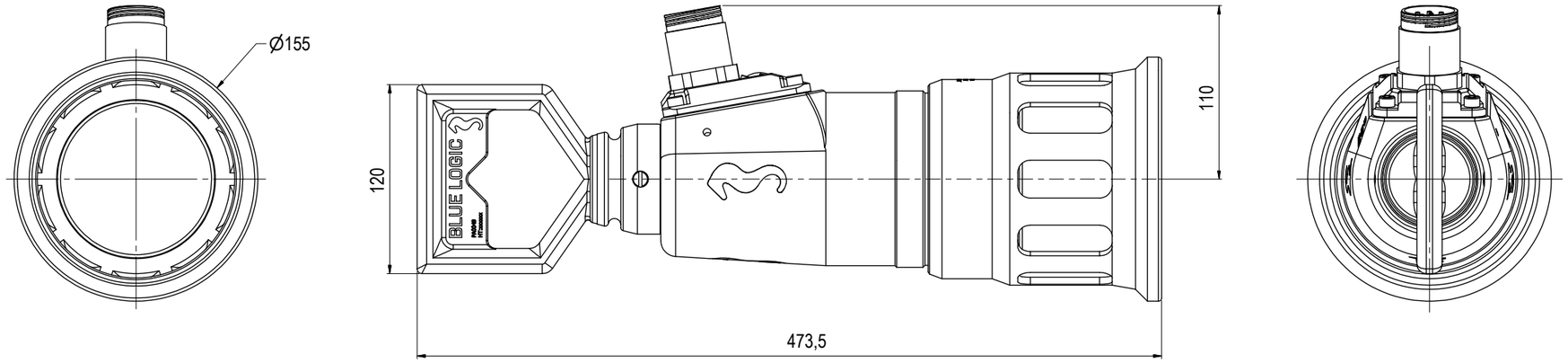

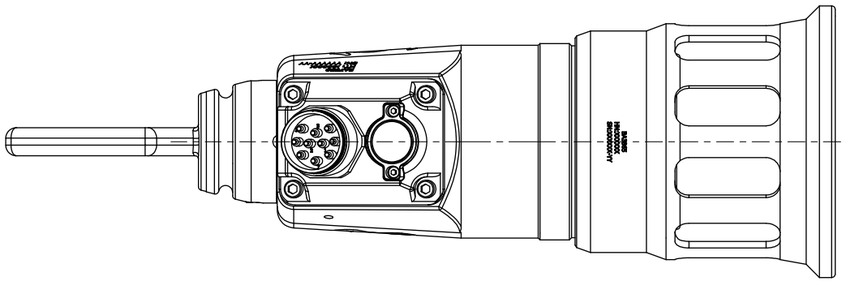

NOTE: 1
DESIGN CODE:
N/A

NOTE: 2
TECHNICAL CLASSIFICATION:

Article Type:	006-El. Connectors
Main Group:	6.01. Subsea USB
Intermediate Group:	6.28.03. 200-900W Subsea USB
Sub Group:	6.28.156.02. Female Connector

NOTE: 3
INTERFACE INFORMATION:

Pressure Rating Bar:	300
Design Water Depth:	3000m
Material:	Anodized Alu (Interv.)
Weight in Air:	6,6 kg
Volume:	2,79 dm^3
Submerged Weight:	3,77 kg
Surface Area:	8458 cm^2
Hydraulic:	N/A
Mechanical:	N/A
Electrical:	Subcon BCR2410M
Com. & Protocol:	Ethernet, RS232

NOTE: 4
OPERATION & MAINTENANCE INFORMATION:
600128-TD-0013

NOTE: 5
ADDITIONAL INFORMATION:
Inductive Subsea Connector for transfer of electrical power and communication.
The Blue Logic inductive connector is a multipurpose electrical connector with the capacity of transferring up to 250W electrical power, 80Mbps Ethernet and 230kbps serial communication.
Easy to connect and disconnect by divers, ROV or AUV's.
BA7752 is a female connector with ROV-handle, configured to be the primary side (transmitting part) in a connector system.

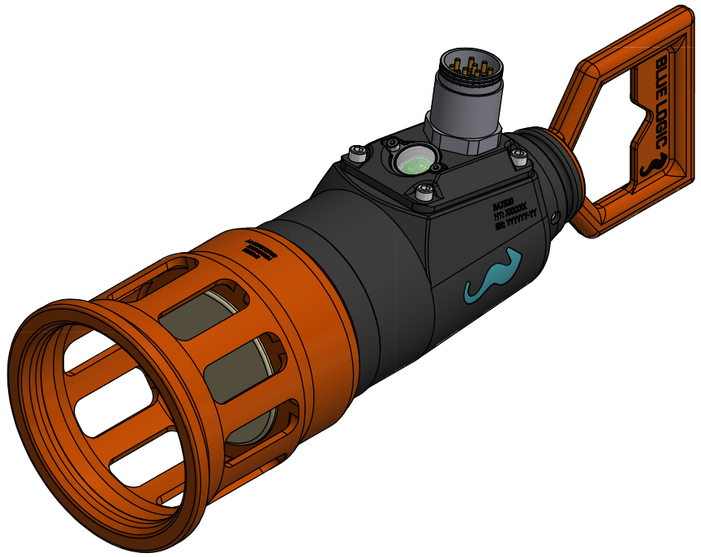

Rev.	Date	Reason for issue	Revision change	Made	Chk'd	Appr.
03	22.8.2023	9-IFU (Issued for Use)		WTJ	LGH	WTJ
02	17.3.2017	9-IFU (Issued for Use)		WTJ	LGH	WTJ
01	7.12.2015	2-IFT (Issued for Tender)		WTJ	LGH	N/A

BLUE LOGIC

This Drawing is the Property of Blue Logic AS © and must Not be Loaned, Reproduced or Transferred to others without written Permission

Dwg Scale: NTS
Dwg Proj:
Dwg Format: A3

Drawing title: 250W Inductive Connector Primary Side wROV Handle RS232

Drawing number: BA7752

Rev. 03