NOTE: 1
DESIGN CODE:
N/A

NOTE: 2
TECHNICAL CLASSIFICATION:

Article Type:	003-Valve Stabs
Main Group:	3.02. Ø43-Valvestab
Intermediate Group:	3.11.02. Receptacle
Sub Group:	3.11.72.1. Single

NOTE: 3
INTERFACE INFORMATION:

Pressure Rating Bar:	690
Material:	Long-term
Weight:	4,8 kg
Volume:	0,61 dm^3
Surface Area:	1494 cm^2
Hydraulic:	N/A
Mechanical:	N/A
Electrical:	N/A
Com. & Protocol:	N/A

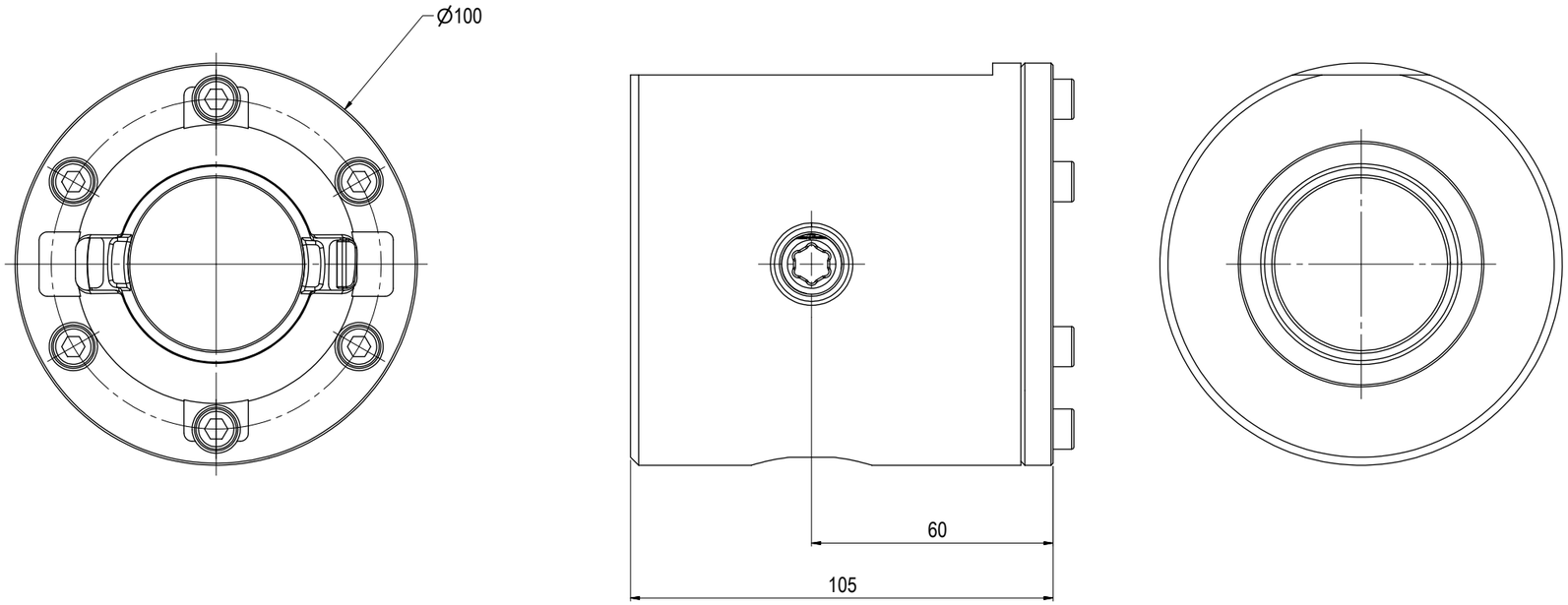

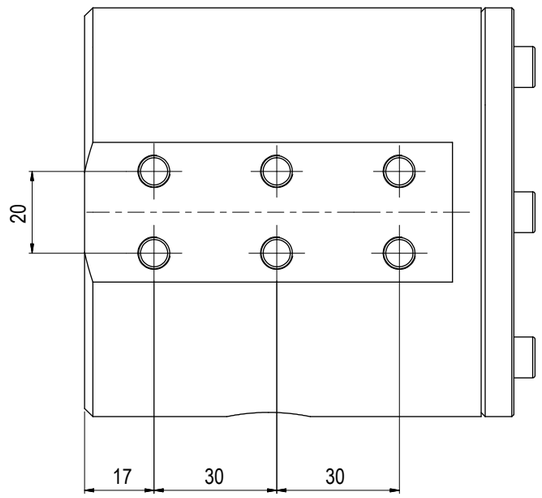

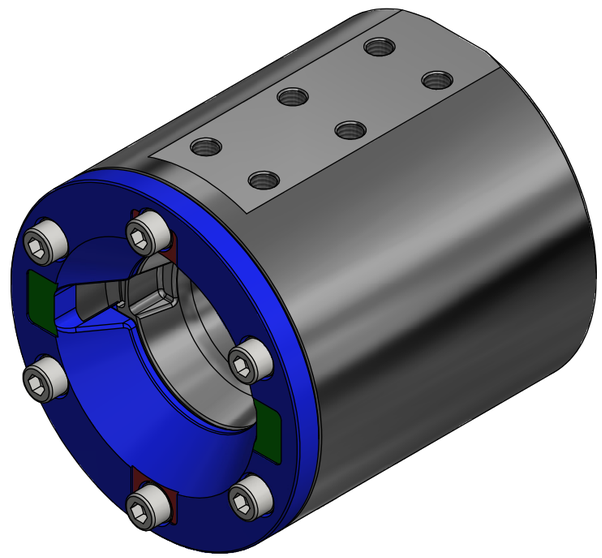

FOR INFORMATION ONLY

Rev.	Date	Reason for issue	Revision change	Made	Chk'd	Appr.
02	28.6.2017	2-IFT (Issued For Tender)		WTJ	LGH	WTJ
01	9.3.2017	2-IFT (Issued for Tender)		WTJ	LGH	WTJ

BLUE LOGIC

Dwg Scale: NTS
Dwg Proj:
Dwg Format: A3

Drawing title: Ø43 SP VStab Rec 10k Long-term

Drawing number: BA9864

Rev. 02