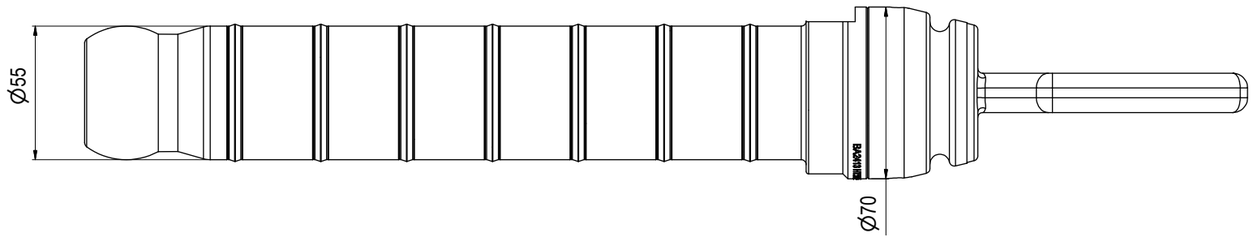

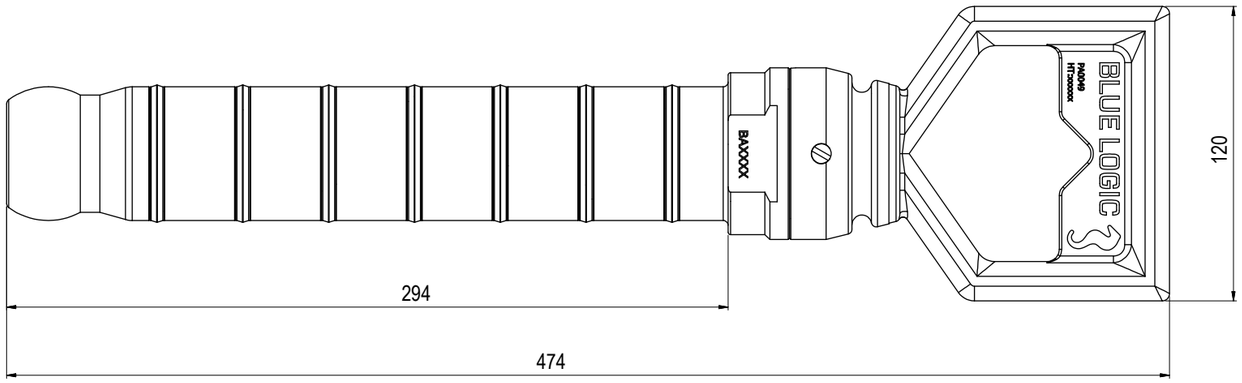

NOTE: 1
DESIGN CODE:
NS-EN 13445

NOTE: 2
TECHNICAL CLASSIFICATION:

Article Type:	003-Valve Stabs
Main Group:	3.03. Ø55-Valvestab
Intermediate Group:	3.12.4. Pressure
Sub Group:	3.12.170.6. Hexa

NOTE: 3
INTERFACE INFORMATION:

Pressure Rating Bar:	690
Material:	Intervention
Weight:	5,9 kg
Volume:	0,84 dm^3
Surface Area:	1716 cm^2
Hydraulic:	N/A
Mechanical:	N/A
Electrical:	N/A
Com. & Protocol:	N/A

NOTE: 4
SPAREPARTS:
BB1689

NOTE: 5
ADDITIONAL INFORMATION:
Usermanual: 600112-TD-0003

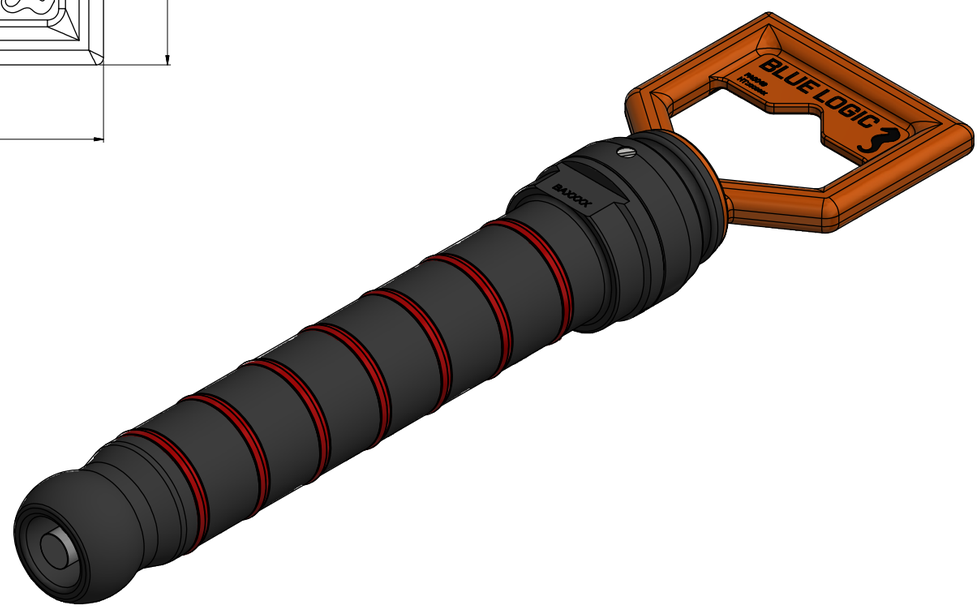

Rev.	Date	Reason for issue	Revision change	Made	Chk'd	Appr.
03	16.6.2014	9-IFU (Issued for Use)		WTJ	HNJ	WTJ
02	22.5.2013	7-IFC (Issued for Construction)		LAE	HNJ	LAE
01	2.5.2012	Issued for Construction		LGH	NA	NA

BLUE LOGIC 3

Dwg Scale: NTS
Dwg Proj:
Dwg Format: A3

Drawing title: Ø55 HP Press VStab 10k Interv

Drawing number: BA2412

Rev. 03